HaluPix Duo

500W IP65 dual layer LED matrix panel with 7x7 2700K 4° Beams + 21x21 RGBWW pixels

USER MANUAL

Rev. 08/Sept/25

English version

Thank you for choosing PROLIGHTS

Please note that every PROLIGHTS product has been designed in Italy to meet quality and performance requirements for professionals and designed and manufactured for the use and application as shown in this document.

Any other use, if not expressly indicated, could compromise the good condition/operation of the product and/or be a source of danger.
This product is meant for professional use. Therefore, commercial use of this equipment is subject to the respectively applicable national accident prevention rules and regulations.

Features, specifications and appearance are subject to change without notice. Music & Lights S.r.l. and all affiliated companies disclaim liability for any injury, damage, direct or indirect loss, consequential or economic loss or any other loss occasioned by the use of, inability to use or reliance on the information contained in this document.

Product user manual can be downloaded from the website www.prolights.it , or can be inquired to the official PROLIGHTS distributors of your territory (***https://www.prolights.it/sales_network.html***).

Scanning the below **QR Code**, you will access the download area of the product page, where you can find a broad set of always updated technical documentation: specifications, user manual, technical drawings, photometrics, personalities, fixture firmware updates.

Visit the download area of the product page

The PROLIGHTS Logo, PROLIGHTS names and all other trademark in this document pertaining to PROLIGHTS services or PROLIGHTS product are trademarks OWNED or licensed by Music & Lights S.r.l., its affiliates, and subsidiaries. PROLIGHTS is a registered trademark by Music & Lights S.r.l. All right reserved. Music & Lights – Via A. Olivetti, snc - 04026 - Minturno (LT) ITALY.

INDEX

1 - PACKAGING **05**
PACKAGE CONTENT....05
OPTIONAL ACCESSORIES....05

2 - TECHNICAL DRAWING **05**

3 - INSTALLATION **06**
MOUNTING....06

4 - CONNECTION TO THE MAINS SUPPLY **07**

5 - START UP **07**
CONNECT AND DISCONNECT POWER FROM THE PRODUCT....07

6 - PRODUCT OVERVIEW **08**

7 - DMX CONNECTION **09**
CONNECTION OF THE CONTROL SIGNAL: DMX LINE....09
INSTRUCTIONS FOR A RELIABLE DMX CONNECTION....09
CONNECTION DAISY CHAIN....09
CONNECTION OF THE DMX LINE....09
CONSTRUCTION OF THE DMX TERMINATION....10
DMX ADDRESSING....10
ETHERNET OPERATION....10
ETHERNET TO DMX OPERATIONS....11
FIRMWARE UPDATE....11

8 - WIRELESS DMX (CRMX) **12**
OPERATION AS A WIRELESS TRANSMITTER (TX MODE)....12
OPERATION AS A WIRELESS RECEIVER (RX MODE)....13
LINKING KEY & UNIVERSE CONFIGURATION....13
BLUETOOTH (TimoTwo only)....13

9 - CONTROL PANEL **14**
DISPLAY AND BUTTONS LAYOUT....14
SHORTCUT....14

10 - MENU STRUCTURE **15**
DIMMER CURVES....23
DIMMER SPEEDS....24
POWER MANAGEMENT....24
USER SETTINGS....25
MASTER/SLAVE....25
COMBINE PIXEL AND MAIN ENGINES....26

11 - DMX CHARTS **27**
DMX BASIC MODES....27
DMX ADVANCED MODES....28
DMX BASIC SECTORS....29
PIXEL DEFINITION....30
CHANNEL DEFINITION....32

12 - RDM FUNCTIONS **41**

13 - ERROR MESSAGES **44**

14 - ACCESSORIES INSTALLATION **45**
HANGING BAR STACKING SYSTEM....45
WALL APPLICATION SYSTEM....47
GROUND BAR STACKING SYSTEM....48

15 - MAINTENANCE **51**
MAINTENANCE AND CLEANING THE PRODUCT....51
REPLACING THE FUSE....51
VISUAL CHECK OF PRODUCT HOUSING....51
TROUBLESHOOTING....52

16 - IP65 RATING TEST **53**

SAFETY INFORMATION

WARNING!

- See https://www.prolights.it/product/HALUPIXDUO#download for installation instructions.
- Please read carefully the instruction reported in this section before installing, powering, operating or servicing the product and observe the indications also for its future handling.

This unit is not for household and residential use, only professional applications.

Connection to mains supply

- The Connection to the mains supply must be carried out by a qualified electrical installer.
- Use only AC supplies 100-240V 50-60 Hz, the fixture must be electrically connected to ground (earth).
- Select the cable cross section in according with the maximum current draw of the product and the possible number of products connected at the same power line.
- The AC mains power distribution circuit must be equipped with magnetic+residual current circuit breaker protection.
- Do not connect it to a dimmer system; doing so may damage the product.
- The product has XLR sockets for DMX input and output.
- Connection of the control signal: DMX LINE.
- Notice: this control circuit is not isolated.
- Cumulative leakage current of less than 3.5mA on the control circuit.

Protection and Warning against electrical shock

- Do not remove any cover from the product, always disconnect the product from AC power before servicing.
- Ensure that the fixture is electrically connected to ground (earth). And use only a source of AC power that complies with local building and electrical codes and has both overload and ground-fault (earth-fault) protection.
- Before using the fixture, check that all power distribution equipment and cables are in perfect condition and rated for the current requirements of all connected devices.
- Isolate the fixture from power immediately if the power plug or any seal, cover, cable, or other components are damaged, defective, deformed or showing signs of overheating.
- Do not reapply power until repairs have been completed.
- Refer any service operation not described in this manual to PROLIGHTS Service team or an authorized PROLIGHTS service center.

Installation

- Make sure that all visible parts of the product are in good visible condition before its use or installation.
- Make sure the point of anchorage is stable before positioning the projector.
- When suspending the fixture above ground level, secure it against failure of primary attachments by attaching a safety cable that is approved as a safety attachment for the weight of the fixture to the attachment point on the main frame of the product. In case the safety cable, enter in action, it needs to be replaced with a new one.
- Install the product only in well ventilated places.
- For non temporary installations, ensure that the fixture is securely fastened to a load-bearing surface with suitable corrosionresistant hardware.
- For a temporary installation with clamps, ensure that the quarter-turn fastener and/or screws are turned fully, and secured with a suitable safety cable.

0,5 m

Minimum distance of illuminated objects

- The projector needs to be positioned so that the objects hit by the beam of light are at least 0.5 meters (1.64 ft) from the lens of the projector.

T_a45°C

Max operating ambient temperature (Ta)

- Do not operate the fixture if the ambient temperature (Ta) exceeds 45 °C (113 °F).

T_a-20°C

Minimum operating ambient temperature (Ta)

- Do not operate the fixture if the ambient temperature (Ta) is below -20 °C (-4 °F).

Protection from burns and fire

- The exterior of the fixture becomes hot during use. Avoid contact by persons and materials.
- Ensure that there is free and unobstructed airflow around the fixture.
- Keep flammable materials well away from the fixture
- Do not expose the front glass to sunlight or any other strong light source from any angle. Lenses can focus the sun's rays inside the fixture, creating a potential fire hazard.
- Do not attempt to bypass thermostatic switches or fuses.

IP65

Permanent Outdoor use

- This product is rated with an IP (Ingress protection) for permanent outdoor use when used and serviced according to the instruction contained in this document.
- Never use the fixture in places subject to vibrations or bumps.
- Make certain that no inflammable liquids, water or metal objects enter the fixture.
- Excessive dust, smoke fluid, and particle build up degrades performance, causes overheating and will damage the fixture.
- Damages caused by inadequate cleaning or maintenance are not covered by the product warranty.

T_c70°C

Temperature of the external surface

- The surface of the fixture can reach up to 70 °C (158 °F) during operation. Avoid contact with people and materials.

Maintenance

- Warning! Disconnect the fixture from AC mains power and allow to cool for at least 10 minutes before handling.
- Only technicians who are authorized by PROLIGHTS or Authorised service partners are permitted to open the fixture.
- Users may carry out external cleaning, following the warnings and instructions provided, but any service operation not described in this manual must be referred to a qualified service technician.
- Important! Excessive dust, smoke fluid, and particle build up degrades performance, causes overheating and will damage the fixture. Damages caused by inadequate cleaning or maintenance is not covered by the product warranty.

Photobiological safety

- This device emits potentially dangerous optical radiation and is identified in the category of Risk Group 2 according to EN 62471.

Do not stare at the operating light source

- Do not look directly at the LED source during operation. It can be harmful to the eyes and skin.
- During Installation, operation and maintenance, be prepared for the fixture to light and move suddenly when connected to power.
- The device should be positioned so that prolonged staring into the luminaire at adistance closer than 1,2 m (3,94 ft) is not expected.

Disposal

- This product is supplied in compliance with European Directive 2012/19/EU – Waste Electrical and Electronic Equipment (WEEE). To preserve the environment please dispose/ recycle this product at the end of its life according to the local regulation.

The products to which this manual refers comply with:

- 2014/35/EU - Safety of electrical equipment supplied at low voltage (LVD).
- 2014/30/EU - Electromagnetic Compatibility (EMC).
- 2011/65/EU - Restriction of the use of certain hazardous substances (RoHS).

The products to which this manual refers comply with:

- UL 1573 + CSA C22.2 No. 166 - Stage and Studio Luminaires and Connector Strips.
- UL 1012 + CSA C22.2 No. 107.1 - Standard for power units other than class 2.

FCC Compliance:

- This device complies with Part 15 of the FCC Rules. Operation is subject to the following two conditions:

1. This device may not cause harmful interference, and
2. This device must accept any interference received, including interference that may cause undesired operation.

Other approvals

- The product meets the safety requirements of the certification procedures of the market in which it is placed and sold.

1 - PACKAGING

PACKAGE CONTENT

- 1x HALUPIXDUO;
- 1 x 1,5 meters 3G1,5mmq power cable (BARE END - SEETRONIC IP65 power connector);
- User Manual.

OPTIONAL ACCESSORIES

Check the updated accessories list, description and informations of the product at the following link:
https://www.prolights.it/product/HALUPIXDUO#accessories

2 - TECHNICAL DRAWING

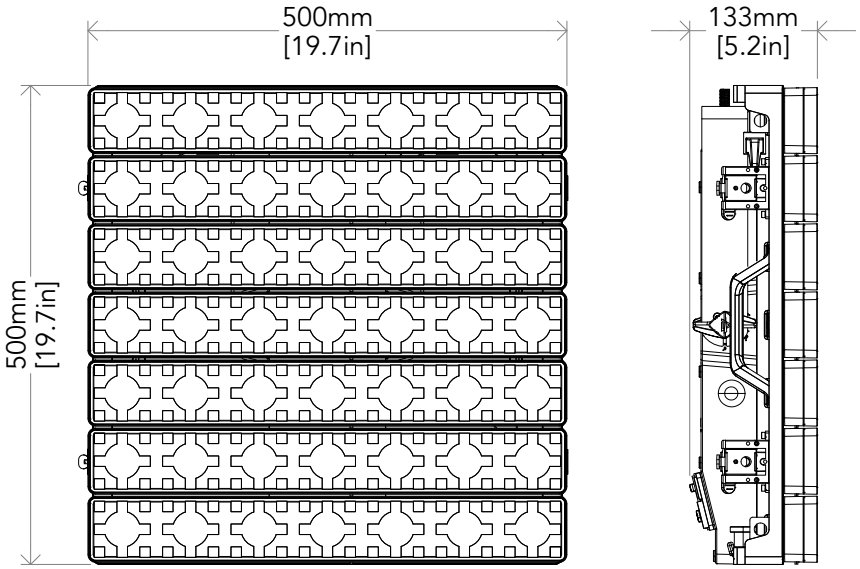

Weight: 16,3 kg - 35,94 lbs

Fig. 01

3 - INSTALLATION

MOUNTING

Ensure the supporting structure can safely bear the combined weight of all installed fixtures, clamps, cables, auxiliary equipment, etc., and complies with local regulations.
When suspending the fixture above ground level, secure it with a safety wire rated for the fixture's weight, attaching it to an anchor point on the main frame. Do not use removable parts or weak anchors for secondary attachment.
Warning: When clamping the fixture to a truss or other structure at any angle, use half-coupler clamps only. Do not use clamps that do not fully encircle the structure when fastened.

NOTE: *for further installations, please check page 45 for all the optional accessories instructions.*

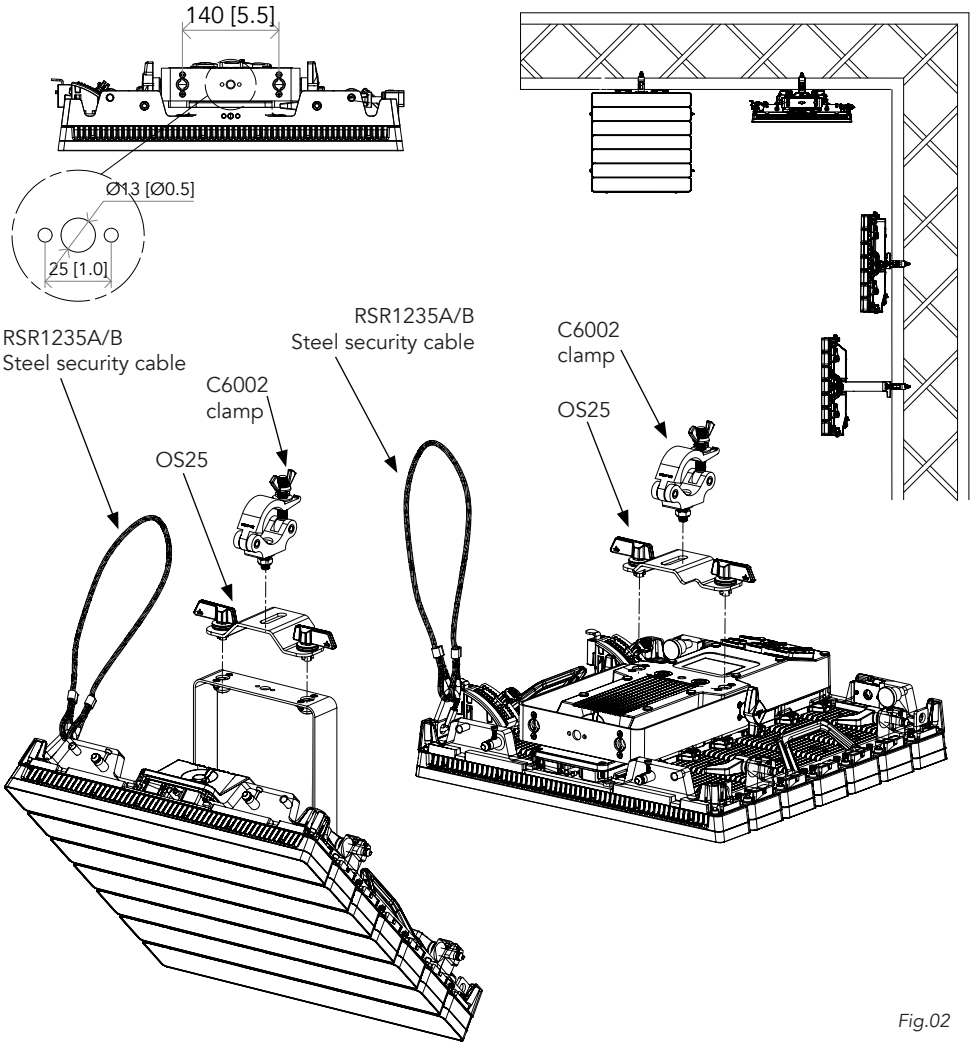

Fig.02

4 - CONNECTION TO THE MAINS SUPPLY

WARNING: For protection from electric shock, the fixture must be earthed!
The product is equipped with auto-switching power supply that automatically adjusts to any 50-60Hz AC power source from 100-240 Volts.
If you need to install a power plug on the power cable to allow connection to power outlets, install a grounding-type (earthed) plug, following the plug manufacturer's instructions. If you have any doubts about proper installation, consult a qualified electrician.
The max power consumption is: 500W.

Core (EU)	Core (US)	Connection	Plug terminal marking
Brown	Black	Live	L
Blue	White	Neutral	N
Yellow+green	Green	Earth	⏚

5 - START UP

CONNECT AND DISCONNECT POWER FROM THE PRODUCT

To apply and disconnect power to the product:

- Check that the product is installed and secured as indicated in the Safety Informations, and that personal safety will not be put at risk when the fixture lights up.
- Connect the power connector into the Mains input socket (100-240 VAC-50/60 Hz).
- The product is then ready for its operations and can be controlled through the available input signals on board.
- To disconnect power from the product, disconnect the Mains from the socket.

6 - PRODUCT OVERVIEW

1. POWER IN / OUT: for connection to the Mains 100-240V~/50-60Hz.
2. ETHERCON CONNECTORS IN / OUT signal.
3. MAIN FUSE HOLDER: replace a burnt-out fuse by one of the same type only (T15A 250V);
4. DMX IN / OUT (5-p XLR): 1 = GND, 2 = sign-, 3 = sign+, 4 N/C, 5 N/C.
5. ANTENNA of Wireless DMX Receiver internal module.
6. USER INTERFACE with display and buttons for access to the control panel functions.
7. GORE VALVE.
8. SAFETY HOLES: for safety cable insertion.
9. ADJUSTABLE MECHANICS: for matrix mounting of multiple units.
10. ADJUSTABLE YOKE: Included tiltable bracket for installations.
11. LED MODULE A (6x).
12. LED MODULE B (1x).

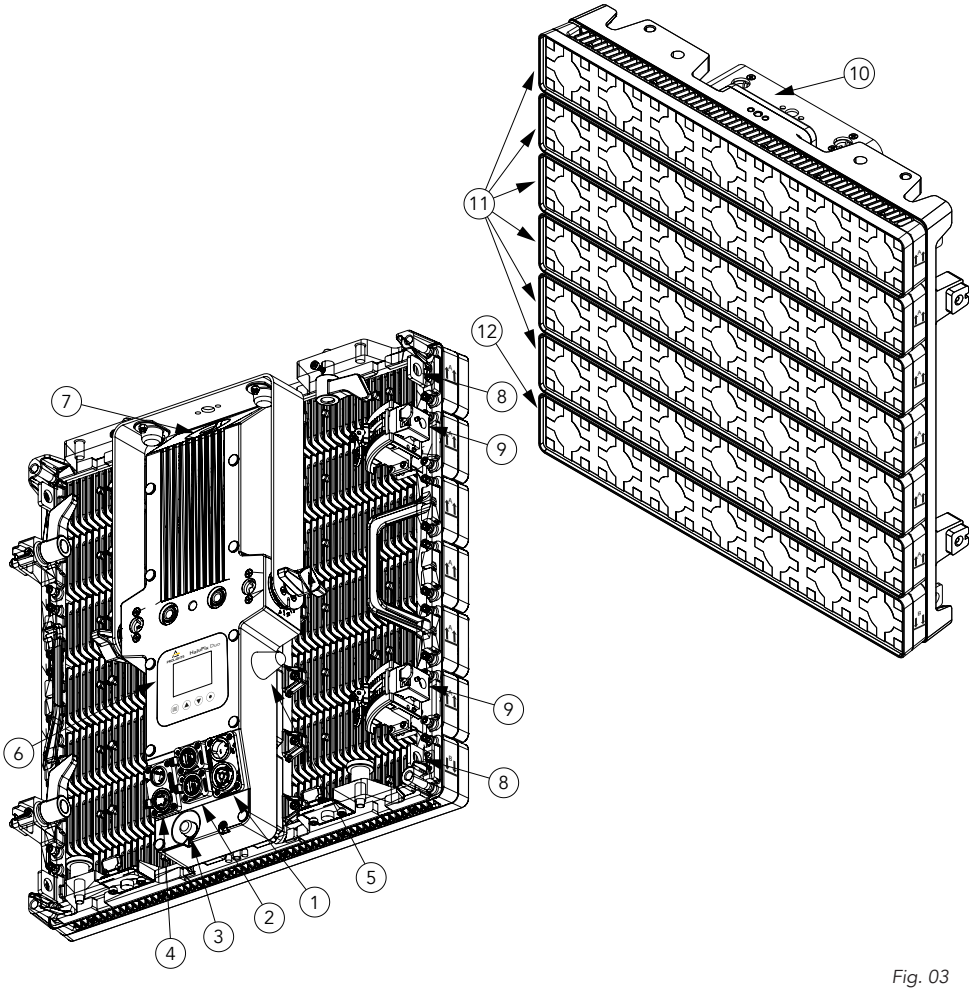

Fig. 03

7 - DMX CONNECTION

CONNECTION OF THE CONTROL SIGNAL: DMX LINE

The product has XLR sockets for DMX input and output.
The default pin-out on both socket is as the following diagram:

DMX - INPUT
XLR plug

Pin1 : GND - Shield
Pin2 : - Signal
Pin3 : + Signal
Pin4 : N/C
Pin5 : N/C

DMX - OUTPUT
XLR socket

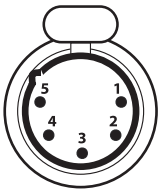

Fig. 04

INSTRUCTIONS FOR A RELIABLE DMX CONNECTION

Use shielded twisted-pair cable designed for RS-485 devices: standard microphone cable cannot transmit control data reliably over long runs. 24 AWG cable is suitable for runs up to 300 meters (1000 ft). Heavier gauge cable and/or an amplifier is recommended for longer runs.
To split the data link into branches, use splitter-amplifiers in the connection line.
Do not overload the link. Up to 32 devices may be connected on a serial link.

CONNECTION DAISY CHAIN

Connect the DMX data output from the DMX source to the product's DMX input (male XLR connector). Run the data link from the product's DMX output (female XLR connector) to the DMX input of the next fixture.

Terminate the data link by connecting a 120 Ω termination resistor. If using a splitter, terminate each branch of the link. Install a DMX termination plug on the last fixture in the link.

CONNECTION OF THE DMX LINE

DMX connection employs standard XLR connectors. Use shielded pair-twisted cables with 120Ω impedance and low capacity.
The following diagram shows the connection mode:

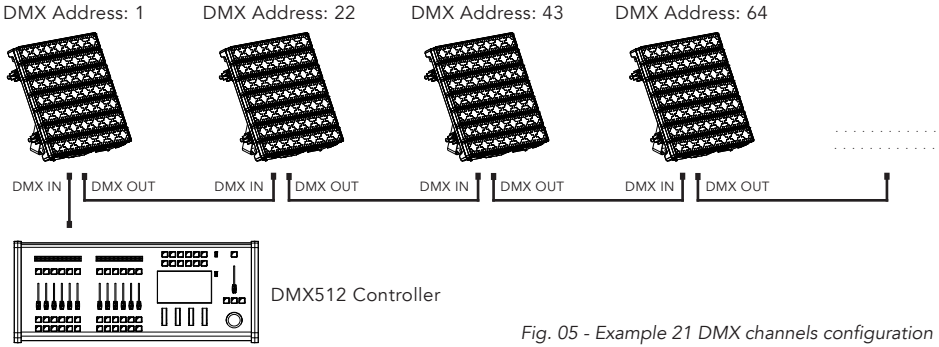

Fig. 05 - Example 21 DMX channels configuration

CONSTRUCTION OF THE DMX TERMINATION

The termination is prepared by soldering a 120Ω 1/4 W resistor between pins 2 and 3 of the male XLR connector, as shown in figure.

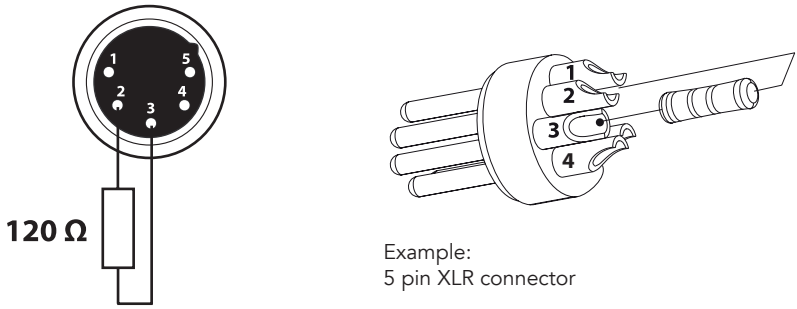

Example:
5 pin XLR connector

Fig. 06

DMX ADDRESSING

To start controlling the product via DMX, the first step is to select a DMX address, also known as the start channel. This is the first channel used to receive instructions from a DMX controller. To control multiple fixtures individually, assign a unique starting address to each fixture.
The number of channels used by the fixture depends on the selected DMX mode, so always check the DMX Mode in the MENU before setting the address.
If two fixtures are assigned the same address, they will behave identically. Assigning the same address to multiple fixtures can be helpful for diagnostic purposes and symmetrical control.
DMX addressing is limited to ensure there are enough control channels available for the fixture.

To set the fixture's DMX address:

1. Press MENU to open the main menu.
2. Navigate to the addressing menu, then select the DMX ADDRESS settings.
3. Choose an address from 1 to 512 using the navigation arrows/buttons and confirm by pressing ENTER.
4. Press Menu to exit and return to the Home screen.

ETHERNET CONNECTION

The product is equipped with two 8-pin RJ-45 sockets for Ethernet input/output, allowing for a simple daisy-chain connection to the network. It supports control via ArtNet/sACN communication protocols. Use a Category 5 network cable (with four twisted wire pairs) and standard RJ-45 connectors.

ETHERNET OPERATION

Please refer to the section MENU STRUCTURE contained in this document for detailed informations about setting parameters on the fixture, including Protocol, Net, Subnet, Universe, Start Channel, IP Address, and Ethernet to DMX (No/Yes).

- IP addresses recommended: 002.xxx.xxx.xxx or 010.xxx.xxx.xxx.
- The submask net is fixed at 255.0.0.0.

ETHERNET: ARTNET UNICAST / sACN MULTICAST
To use ETH1 (ArtNet) + ETH2 (sACN) on the Pixel Engine, please set ARTNET=Unicast + sACN=Multicast. However, on HALUPIXDUO, it is always recommended to use Artnet Unicast (with packet sync enabled when managing the Pixel Engine with a media server) and sACN multicast with IGMP enabled. Using Artnet Broadcast, the projector will freeze due to the large number of data packets.

ETHERNET TO DMX OPERATIONS

Refer to the MENU STRUCTURE section in this document for detailed information.
This function enables the fixture to receive an Ethernet signal and retransmit it onto a DMX line through its onboard XLR output.

- An Ethernet protocol (Artnet, sACN or others available) has to be enabled from Ethernet menu at first fixture. **Ensure that the wireless receiver is set to OFF when using Ethernet communication.**
- Enable the option Ethernet To DMX choosing which fixture needs to be retransmitted (Main Fixture or Pixel Engine) from the Ethernet menu at the first product (connected to the Ethernet) in the signal chain, next products have standard DMX setting.
- Connect the Ethernet input of the first product in the data chain with the network. Connect the DMX output of this product with the input of the next product until all products are connected to the DMX chain.
- Caution: At the last product, the DMX chain has to be terminated with a terminator. Solder a 120 Ω resistor between Signal (–) and Signal (+) into a XLR-plug and connect it in the DMX-output of the last product.

FIRMWARE UPDATE

The fixture can be updated by two following options:

- With .prl file by UPBOXPRO interface with Upbox_Tool software available at the following LINK:
- With .ALF file by DMXWorkshop following the guide at this LINK:

8 - WIRELESS DMX (CRMX)

HALUPIXDUO supports wireless DMX communication through the integrated CRMX module. The fixture can operate either as a transmitter (TX) or a receiver (RX), with access to a full set of features including linking, protocol selection, and data routing.

RX MODE			LINK STATUS	TX MODE	
SIGNAL QUALITY	DMX PRESENCE	ICON		DMX PRESENCE	ICON
N/A	N/A	x	NOT LINKED / OFF	-	
N/A	N/A		LINKING / READY TO PAIR	N/A	
< 25%	Yes		LINKED	Yes	
25% to 50%	Yes		LINKED	-	
50% to 75%	Yes		LINKED	-	
> 75%	Yes		LINKED	-	
< 25%	No	x	LINKED	No	x
25% to 50%	No	x	LINKED	-	
50% to 75%	No	x	LINKED	-	
> 75%	No	x	LINKED	-	

OPERATION AS A WIRELESS TRANSMITTER (TX MODE)

HALUPIXDUO can transmit DMX wirelessly to compatible CRMX receivers

1. Enter the **CONNECT** menu, navigate to **WIRELESS** and press **ENTER**.
2. Set **CRMX ON/OFF to ON** and **CRMX MODE to TX** (Transmitter).
3. To initiate linking, set **TX LINK to ON** (available only in TX mode).

The fixture will scan for unlinked receivers for ~5 seconds and attempt connection. Ensure receivers are not already linked. If the connection fails, check the position of the receiver.

TX UNLINK

To disconnect all receivers linked to HALUPIXDUO:

1. Enter the **CONNECT** menu, navigate to **WIRELESS** and press **ENTER**.
2. Set **TX UNLINK to ON**.

TX PROTOCOL SELECTION

To change the CRMX transmission protocol (G3, G4S, CRMX):

1. Perform **TX UNLINK** on the device and an **RX RESET** on the receiver.
2. Select the desired protocol in CRMX MODE (G3, G4S, CRMX).
3. Execute **TX LINK** again.

IN TO CRMX (TX only)

Allows the fixture to transmit any incoming signal (DMX, Art-Net, or sACN) via wireless.

- If HALUPIXDUO receives Art-Net/sACN, these take priority over DMX.
- Do not use IN TO CRMX and ETH TO DMX simultaneously to avoid data conflicts.

OPERATION AS A WIRELESS RECEIVER (RX MODE)

HALUPIXDUO can receive a wireless DMX signal from a CRMX transmitter.

1. Enter the **CONNECT** menu.
2. Navigate to **WIRELESS** and press ENTER.
3. Set **CRMX ON/OFF to ON**.
4. Set **CRMX MODE to RX** (Receiver).
5. Set **RX RESET to ON** to clear previous links.

Then, from the transmitter, execute **TX LINK**.
Once linked:

- The display will show the DMX address if signal is present.
- It will show "No Signal" if no DMX input is detected, but the link remains active.

CRMX TO DMX (RX only)

Allows retransmission of the received wireless DMX signal to the physical DMX output port of the receiver.

LINKING KEY & UNIVERSE CONFIGURATION

The CRMX system allows secure pairing and logical organization of wireless DMX communication through the use of Linking Keys, Universes, and optional Metadata.

RX Mode (Receiver)

When HALUPIXDUO is set to RX mode, the following options are available:

- **Linking Key**: An 8-digit numeric code that uniquely identifies the transmitter. The receiver will only connect to transmitters using the same key, ensuring secure and intentional linking.
- **Linking Universe**: Defines the receiver's wireless universe. Universes are labeled A to H, with extended universe options (B, D, F, H) available only on devices with CRMX2 hardware.

TX Mode (Transmitter)

In addition to the options above, when HALUPIXDUO is configured as a CRMX transmitter, it also provides access to:

- **Universe Metadata**: Allows assigning a name and a color tag to the universe. This visual indicator is shown on the display of connected receivers, helping users quickly identify which transmitter a fixture is linked to.

BLUETOOTH (TimoTwo only)

HALUPIXDUO includes Bluetooth support (exclusively on devices equipped with the TimoTwo CRMX module)
The Bluetooth interface is used to:

- Connect the fixture to the **LumenRadio CRMX Toolbox** app (iOS/Android).
- Remotely configure the **wireless module**, including universe, linking key, mode, and metadata.
- Perform **firmware updates** on the CRMX wireless module without physical access to the fixture.

Bluetooth Functions:

BLUETOOTH - ON/OFF toggle to activate or disable Bluetooth visibility.
PIN - Custom pairing code for secure connection to the app.

9 - CONTROL PANEL

The product has a display, buttons and pushable encoders for access to the control panel functions.

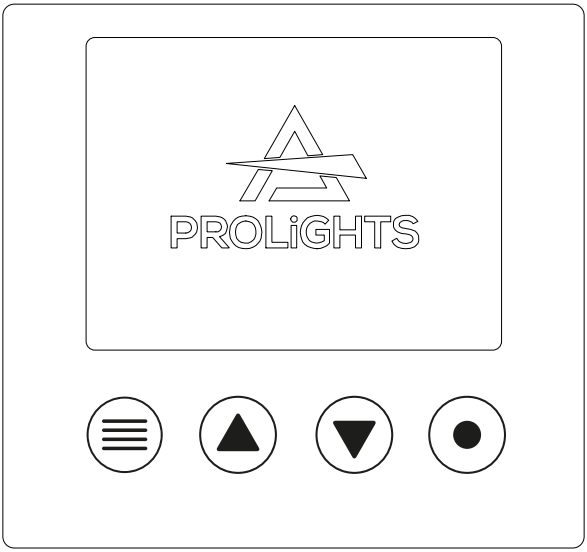

Fig. 07

DISPLAY AND BUTTONS LAYOUT

The product has a display and buttons for access to the control panel functions:

	MENU - Used to access the menu tree and to return to the upper level. Hold to go back to the home screen.
	UP - Browse upwards through the menu list and increases the numeric value displayed.
	DOWN - Browse downwards through the menu list and decreases the numeric value displayed.
	ENTER - Used to confirm the displayed value, or activate the displayed function.

SHORTCUT

Keys	Mode	Description
UP + DOWN after power on	Flip Display	Directly flip display without enter inside menu
ENTER (3 sec)	Standalone Mode	Direct access to Standalone menu (when no DMX signal)
MENU + UP then power on	Factory Reload	Factory Default

10 - MENU STRUCTURE

The following chart describes the MENU tree of the product, the terms shown in **BOLD** indicate the default settings.

MENU: CONNECT

LEVEL 1	LEVEL 2	LEVEL 3	LEVEL 4	LEVEL 5	DESCRIPTION
DMX ADDRESS	MAIN + BEAM	**DMX**	1-512		*Set DMX Address for Main fixture*
		ARTNET			
		SACN			
	PIXELS	**FOLLOW FIXTURE**	1-512		*Set DMX Address for Pixel Engine*
		DMX			
		ARTNET			
		sACN			
		sACN+ARTNET			
DMX MODE	BASIC	BEAM LAYER: **SINGLE** 49 PIX	PIXELS LAYER: **OFF** 49S PIXELS PIXELS+BEAM		*SINGLE means no single pixel control, channels on main control white BEAM leds. 49PIX means single dimmer for each white BEAM led is added after the main channels. Main channels of BEAM leds (dimmer and shutter) works as master. Main dimmer of BEAM source must be @ full to see pixels (and it's dimmer value). Pixels crossfade is no needed.*
	STANDARD				
	FX 1				
	FX 2				
	FX 3				
	EXTENDED				
	PIXEL ONLY	OFF			*Allow to patch pixels only without need to patch main channels*
		49S	*(Beam is same white as pixels)*		
		PIXELS			
		PIXELS + BEAM	*(pixels and Beam)*		
	BASIC SECTORS	PIXELS LAYER: **OFF** 49S PIXELS PIXELS + BEAM			
WIRELESS	CRMX ON/OFF	ON			*Enable the wireless card.*
		OFF			
	CRMX MODE	TX CRMX			*Allows configuration of the wireless card as either a Transmitter or Receiver. G4s and G3 are supported protocols for connection with Wireless Solution products.*
		TX G4S			
		TX G3			
		RX			
	TX LINK	ON			*Enables the transmission link when the unit is set as a Transmitter.*
		OFF			
	TX UNLINK	ON			*Disconnects the transmitter from all connected receivers. TX Unlink can only be used when the unit is in Transmitter mode in CRMX settings.*
		OFF			
	RX RESET	ON			*Disconnects the CRMX card, set as a Receiver, from any connected transmitters.*
		OFF			
	IN TO CRMX (TX)	**ON**			*Enable/Disable the transmission of the DMX from the transmitter to the receiver via CRMX*
		OFF			

MENU: CONNECT

LEVEL 1	LEVEL 2	LEVEL 3	LEVEL 4	LEVEL 5	DESCRIPTION
WIRELESS	CRMX TO DMX (RX)	**ON**			*Enable/Disable the retransmission of the DMX from the receiver to the other units connected by cable to the receiver itself*
		OFF			
	LINKING KEY	ON	SET LINKING KEY	8 digit code	*RX MODE: Linking key section available only in RX mode.* *TX MODE: When in TX mode, message on screen: "Linking Key available only in RX Mode"*
		OFF			
	UNIVERSE METADATA	UNIVERSE NAME	xxx		*RX Mode: received from TX;* *TX CRMX Mode: default first 16 characters of Model Name:* *(DEVICELABEL-Last 4 digit of RDM UID)*
		UNIVERSE COLOR	RED		*Universe Color can be set only if CRMX Mode@TX;* *If CRMX Mode@RX, Universe Color shows the one set on the TX*
			FIRE		
			YELLOW		
			GREEN		
			EMERALD		
			OCEAN		
			BLUE		
			DEEP PURPLE		
			COOL WHITE		
	LINK STRENGTH	** %			*Show Wireless quality by percentage*
	CRMX CARD VERSION	TimoFX: Vx.x.xx			*Show firmware version of TimoFX module*
ETHERNET SETTINGS	ARTNET SETTINGS	FIXTURE	IP ADDRESS	xxx.xxx.xxx.x	*Set IP Address for ArtNet usage.*
			SUBNET MASK	255.xxx.xxx.x	*Set SubNet Mask for ArtNet usage.*
			NET	0-127	*Set Net used for ArtNet, value from 0 to 127*
			SUBNET	0-15	*Set SubNet used for ArtNet, value from 0 to 15*
			UNIVERSE	0-15	*Set Universe used for ArtNet, value from 0 to 15*
		PIXELS	IP ADDRESS	xxx.xxx.xxx.x	*Set IP Address for ArtNet usage.*
			SUBNET MASK	255.xxx.xxx.x	*Set SubNet Mask for ArtNet usage.*
			NET	0-127	*Set Net used for ArtNet, value from 0 to 127*
			SUBNET	0-15	*Set SubNet used for ArtNet, value from 0 to 15*
			UNIVERSE	0-15	*Set Universe used for ArtNet, value from 0 to 15*
	sACN SETTINGS	FIXTURE	IP ADDRESS	xxx.xxx.xxx.x	*Set IP Address for sACN usage.*
			UNIVERSE	1-63999	
			SUBNET MASK	255.xxx.xxx.x	
			MERGE MODE	OFF	*Toggle and Set Merge mode for sACN.*
				HTP	
				LTP	

MENU: CONNECT

LEVEL 1	LEVEL 2	LEVEL 3	LEVEL 4	LEVEL 5	DESCRIPTION
ETHERNET SETTINGS	FIXTURE	PIXELS	IP ADDRESS	xxx.xxx.xxx.x	*Set IP Address for sACN usage.*
			UNIVERSE	1-63999	
			SUBNET MASK	255.xxx.xxx.x	
			MERGE MODE	OFF	*Toggle and Set Merge mode for sACN.*
				HTP	
				LTP	
	ETHERNET TO CRMX	**ON**			*Enables retransmission of the Ethernet signal over CRMX.*
		OFF			
	ETHERNET TO DMX	**ON**			*Enables retransmission of the Ethernet signal over a standard DMX cable. A slight time delay may occur on the DMX line.*
		OFF			

MENU: SETUP

LEVEL 1	LEVEL 2	LEVEL 3	LEVEL 4	LEVEL 5	DESCRIPTION
SCREEN	BACKLIGHT	ALWAYS ON			*Sets the time after which the display will automatically turn off when inactive.*
		10S			
		20S			
		30S			
	FLIP DISPLAY	ON			*Enables the display to be rotated by 180°.*
		OFF			
	KEY LOCK	ON			*Lock the buttons on the control panel with a password. To access the user menu, enter the following button sequence (password): UP, DOWN, UP, DOWN, ENTER.*
		OFF			
	DISPLAY VALUE	RAW DATA			*Choose how to show datas on Stand Alone Modes:* *In percentage mode values will be shown as 0-100%.* *In Raw Data mode values will be shown as 0-255.*
		PERCENTAGE			
	TEMP. UNIT	**°C**			
		°F			
DIMMER	DIMMER CURVE	PIXELS	LINEAR		*Check pag.22 for further details*
			S-CURVE		
			SQUARE LAW		
			INVERSE SQUARE LAW		
			HIGH RES@LOW		
		BEAM	LINEAR		
			S-CURVE		
			SQUARE LAW		
			INVERSE SQUARE LAW		
			HIGH RES@LOW		
			TUNGSTEN		

MENU: SETUP

LEVEL 1	LEVEL 2	LEVEL 3	LEVEL 4	LEVEL 5	DESCRIPTION
DIMMER	DIMMER SPEED	PIXELS	AUTO		*Check pag.23 for further details*
			FAST		
			MEDIUM		
			SLOW		
			OFF		
		BEAM *(available only when TUNGSTEN CURVE is not selected)*	**AUTO**		
			FAST		
			MEDIUM		
			SLOW		
			OFF		
	DIMMER END	**FADE OFF@END**			*Defines how the light turns off: FADE OFF@END for a smooth fade-out, or SNAP OFF@END for an instant off.*
		SNAP OFF@END			
FIXTURE	DMX FAULT	**HOLD**			*Defines fixture behavior on DMX signal loss: HOLD (keep last state), BLACKOUT (turn off), STAND ALONE (run internal program), or EMERGENCY (activate emergency mode with white output).*
		BLACKOUT			
		STAND ALONE			
		EMERGENCY			
	INVERT MAPPING	**OFF**			*Normal pixel mapping*
		CW 90°			*Invert 90 ° clockwise*
		CW 180 °			*Invert 180 ° clockwise (upside down)*
		CW 270°			*Invert 270 ° clockwise*
POWER MANAGEMENT	DYNAMIC				*Dynamic = the device automatically manages the power distribution between the two LED sources (Pixels - Beam).*
	CONSTANT	50% PIXEL - 50% BEAM			*Constant = the power ratio between Pixels and Beam Led source is fixed with a certain percentage.*
		70% PIXEL - 30% BEAM			
		30% PIXEL - 70% BEAM			
USER SETTINGS	PRESET 1	SAVE RECALL DELETE			*Allows users to store all fixture settings, similar to a configuration file. Up to 5 presets can be saved.* *Check pag.25 for further details*
	PRESET 2				
	PRESET 3				
	PRESET 4				
	PRESET 5				
TRANSFER SETTING	WITHOUT DMX ADDRESS				*Transfer settings from the current fixture to another fixture of the same model using the DMX protocol. If a signal from another source is present, the Transfer Configuration function will not be available.*
	WITH DMX ADDRESS				

MENU: ADVANCED

LEVEL 1	LEVEL 2	LEVEL 3	LEVEL 4	LEVEL 5	DESCRIPTION
WHITE POINT	3200K				*This setting defines the target white balance of the fixture by allowing selection of a specific white point, ranging from 3200K to 8000K, or OFF. Selecting a white point ensures a consistent white tone when all color channels are at full intensity, adjusting for any potential color cast. When set to OFF, the white may appear uncalibrated, reflecting the natural balance of the LEDs.*
	4000K				
	5600K				
	6000K				
	8000K				
	OFF				
LED FREQUENCY	600HZ				*Select PWM frequency.* *NOTE: Using higher LED Frequency color accuracy may be slightly compromised at low level of dimmer.*
	1200HZ				
	2000HZ				
	4000HZ				
	6000HZ				
	25KHZ				
TEST	ALL				*Perform a test to identify not working LEDs or a wrong assembly. A color scroll sequence, vertical line and horizontal line will be displayed to check the fixture.*
	BEAM LED				
	PIXELS LED				
FACTORY RELOAD	BASIC	**OFF**			*Default of all parameters excepted Ethernet Settings*
		ON			
	STANDARD	**OFF**			*Default of all parameters*
		ON			
	USER PRESET	**OFF**			*Delete all USER PRESETS stored*
		ON			

MENU: INFORMATIONS

LEVEL 1	LEVEL 2	LEVEL 3	LEVEL 4	LEVEL 5	DESCRIPTION
FIXTURE TIME	FIXTURE HOURS	TOTAL	<65535H>		*View informations about product operating lifetime.* *Fixture Hours is countered based on general operation time.* *Hours are countered since Power is plugged in.* *Source Hours is countered based on LED Activity time*
		PARTIAL	<65535H>		
	CURRENT HOURS	TOTAL	<65535H>		
		PARTIAL	<65535H>		
	SOURCE HOURS	TOTAL	<65535H>		
		PARTIAL	<65535H>		
	AC POWER ON CYCLE	TOTAL	<65535H>		
		PARTIAL	<65535H>		
	MAINTENANCE TIME	ELAPSED TIME			
		ALERT PERIOD	10 - 1000		
POWER CONS.	** W				*Show estimated power consumption*
TEMP.	LED1 Temp1 xx C°				
	LED1 Temp2 xx C°				
	[...]				
	LED7 Temp1 xx C°				
	LED7 Temp2 xx C°				
CHANNEL VALUE					*Show all Channel values as a list, value shown depends on DMX Mode*
ERROR MESSAGE					*Show error messages*
DEVICE LABEL	HALUPIXDUO				*Show RDM Label.*
DEVICE MODEL	HALUPIXDUO				*Show RDM fixture model*
RDM UID	15D0********				*Show RDM UID of the fixture.*
SOFTWARE VERSION	V1.0.00...				*Show firmware version of the fixture*

MENU: STAND ALONE

LEVEL 1	LEVEL 2	LEVEL 3	LEVEL 4	LEVEL 5	DESCRIPTION
MASTER/SLAVE	MASTER DMX				*Check "MASTER/SLAVE" on page 25*
	MASTER NO DMX				
	SLAVE				
PIXELS LAYER	OFF				
	TOUR FX	FX 1-23	PATTERN SPEED	0-255	*Default value: 128*
			PATTERN FADE	0-255	*Default value: 0*
			F.G. INTENSITY	0-255	*Default value: 255*
			F.G. STROBE	0-255	*Default value: 255*
			F.G. RED	0-255	*Default value: 255*
			F.G. GREEN	0-255	*Default value: 0*
			F.G. BLUE	0-255	*Default value: 0*
			F.G. WARM WHITE	0-255	*Default value: 0*
			B.G. INTENSITY	0-255	*Default value: 255*
			B.G. STROBE	0-255	*Default value: 255*
			B.G. RED	0-255	*Default value: 0*
			B.G. GREEN	0-255	*Default value: 0*
			B.G. BLUE	0-255	*Default value: 255*
			B.G. WARM WHITE	0-255	*Default value: 0*
	CCT	DIMMER	0-255		*Default value: 255*
		CCT	2800K-10000K		*Default value: 2800K*
		GMP	-0.25 to +0.25		*Default value: 0*
	HSI	Hue	0-255		*Default value: 0*
		Saturation	0-255		*Default value: 0*
		Intensity	0-255		*Default value: 255*
	FIXED COLORS	R	DIMMER	0-**255**	*Default value: RGBW DIMMER: 255*
		G			
		B			
		W			
		RG			
		RB			
		RW			
		GB			
		GW			
		BW			
		RGB			
		RGW			
		RBW			
		GBW			
		RGBW			

MENU: STAND ALONE

LEVEL 1	LEVEL 2	LEVEL 3	LEVEL 4	LEVEL 5	DESCRIPTION
PIXELS LAYER	WHITE PRESETS	2800K	DIMMER I GMP	0-255	*Default value:* *DIMMER: 255* *GMP: 128*
		3200K			
		3500K			
		4000K			
		4500K			
		5000K			
		5600K			
		6000K			
		6500K			
		7000K			
		8000K			
		9000K			
		10000K			
	COLOR MACRO	DIMMER	0-255		
		COLOR MACRO			(Check color macro table pag.33)
	MANUAL COLORS	DIMMER	0-255		*Default value: 255*
		RED	0-255		*Default value: 255*
		GREEN	0-255		*Default value: 255*
		BLUE	0-255		*Default value: 255*
		WHITE	0-255		*Default value: 255*
BEAM LAYER	OFF				
	TOUR FX	FX 1-XX	PATTERN SPEED	0-255	*Default value: 128*
			PATTERN FADE	0-255	*Default value: 0*
			FOREGROUND INTENSITY	0-255	*Default value: 255*
			FOREGROUND STROBE	0-255	*Default value: 255*
			BACKGROUND INTENSITY	0-255	*Default value: 255*
			BACKGROUND STROBE	0-255	*Default value: 255*
	STATIC	DIMMER	0-255		*Default value: 255*

DIMMER CURVES

Five dimming modes are available:

1. **LINEAR** - Light intensity increases proportionally to the DMX value, creating a linear perception.
2. **S-CURVE** - Light intensity is finer at low and high levels, with coarser control at mid-levels.
3. **SQUARE LAW** - Light intensity is finer at low levels and becomes coarser at higher levels.
4. **INVERSE SQUARE LAW** - Light intensity is coarser at low levels and finer at higher levels.
5. **HIGHRES@LOW** - Provides very fine control at low light intensities, with coarser control at medium and high levels.

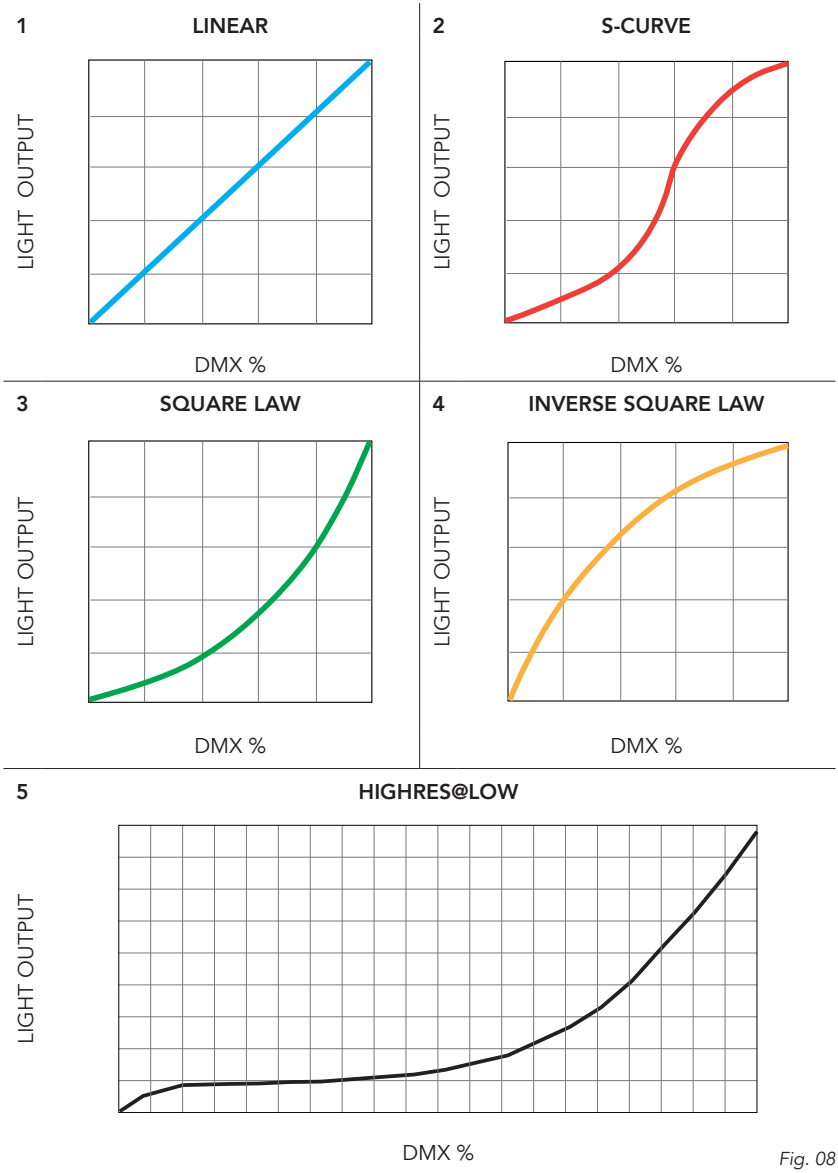

Fig. 08

DIMMER SPEEDS

Five dimming speeds are available:

1. **AUTO** - When the DMX value changes by more than 50 DMX values, the intensity will instantly adjust to the new value. For changes less than 50 DMX values, the fast dimming curve will be applied.
2. **FAST** - Indicates the fast speed dimming curve. Refer to the diagram for reference.
3. **MEDIUM** - Indicates the medium speed dimming curve. Refer to the diagram for reference.
4. **SLOW** - Indicates the slow dimming curve. Refer to the diagram for reference.
5. **OFF** - The intensity will immediately adjust to the new value (essentially no delay effect).

DIMMER SPEED BEHAVIOUR

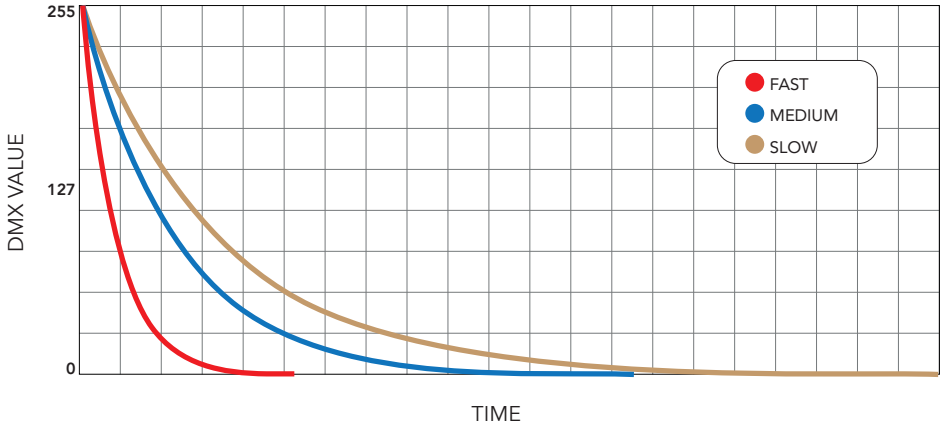

POWER MANAGEMENT

This function allows control over how power is distributed between the fixture's two different LED sources: Beam LEDs and Pixel LEDs. Since the total available power is limited, this setting determines how it is allocated when both sources are active.

Available Modes:

- **DYNAMIC -** The fixture automatically adjusts power distribution based on the active LED sources. If only the Beam Layer is fully on, it will receive 100% of the available power. Similarly, if only the Pixel Layer is on, it will also receive 100%. However, when both layers are active, power is dynamically allocated between them to optimize performance.

- **CONSTANT -** The power allocation between Beam and Pixel LEDs remains fixed, ensuring that activating one source does not reduce the intensity of the other. This mode prevents power shifting and maintains a consistent balance according to the selected ratio:
  - 70% Pixel – 30% Beam
  - 50% Pixel – 50% Beam
  - 30% Pixel – 70% Beam

USER SETTINGS

This function allows the fixture to store and manage custom settings, which are saved as user presets. Factory default settings will not overwrite these saved presets, preserving each user's configuration.

- **SAVE -** Available when a preset slot is empty, enabling users to save the current fixture settings into that slot. Up to five presets can be saved for quick recall of different configurations.
- **RECALL -** Loads the settings stored in a selected preset slot, applying them to the fixture and making it easy to switch between saved configurations as needed.
- **DELETE -** Clears the selected preset slot, freeing it up for a new save. Deleting a preset does not impact any other saved presets or factory settings.

MASTER/SLAVE

The MASTER/SLAVE function enables the fixture to operate in standalone mode, where it must be set to MASTER. When configured correctly, this allows one fixture to control multiple fixtures in a daisy chain setup, ensuring synchronized operation. Below are the available modes:

- **MASTER DMX -** The fixture operates as the master, with standalone mode active, and transmits the same standalone functionality via DMX to other fixtures in the daisy chain.
- **MASTER NO DMX -** The device works as master but does not transmit the DMX signal to the other devices connected in the daisy chain.
- **SLAVE -** The fixture remains in standby, waiting to receive a signal from another device set to MASTER DMX. If a standalone mode is selected on the fixture, it will automatically switch to MASTER NO DMX.saved presets or factory settings.

COMBINE PIXEL AND MAIN ENGINES

The Fixture engine provides the following DMX operating modes:
- **BASIC**
- **STANDARD**
- **FX 1**
- **FX 2**
- **FX 3**
- **EXTENDED**
- **BASIC SECTORS**

The Pixel engine offers this modes:
- **49S**
- **PIXELS**
- **PIXELS + BEAM**

When setting the DMX mode, the fixture allows for configuring the operating method by selecting the DMX MODE of the main engine first. Afterward, the fixture will prompt for the BEAM LED mode, asking if they should be set to SINGLE or 49PIX. The chosen configuration for the hard LEDs will then follow the DMX mode of the pixel engine.

Next, the fixture will ask for the PIXELS LAYER mode, with four options:
- **OFF** (inactive)
- **49S** (the fixture is divided into 49 RGBW sectors, with BEAM LEDs being triggered by the white of each sector)
- **PIXELS** (only the PIXEL LEDs are patched as the pixel engine)
- **PIXELS + BEAM** both sources are available as single pixel

For example, if FX3 mode is selected, with Beam Layer set to 49PIX and Pixels Layer set to PIXELS, the console will need to patch the FX3+49PIX mode (with 49 warm white LEDs following the main mode) and separately patch the PIXELS mode.

With the pixel engine patched separately, the soft LEDs can be assigned and controlled using a different DMX address or protocol. This setup makes it possible to control the main engine and BEAM LEDs via a DMX console, while the PIXEL LEDs can be controlled using pixel mapping through a media server on ArtNet or sACN.

To activate the pixel engine on the fixture's main engine, the **XFADE TO PIXEL ENGINE** channel is available.
- At DMX value 000, the fixture uses pixel control via the selected DMX base mode.
- At 255, the pixel control switches, allowing the signal from the protocol used by the pixel engine (e.g., ArtNet or sACN) to control the pixels.

EXAMPLE:

Main DMX mode	Beam Layer mode	Pixels Layer mode	Channels
FX3 39 ch	**49 PIX** 49 ch	**49 S** 196 ch	**MAIN + BEAM 88 ch** **PIXELS ENGINE 196 ch** following main+beam or can be assigned to a different source
FX3 39 ch	**SINGLE** 0 ch	**PIXELS** 1764 ch	**MAIN + BEAM 39 ch** **PIXELS ENGINE 1764 ch** following main+beam or can be assigned to a different source

11 - DMX CHARTS

DMX BASIC MODES

	PARAMETER	BASIC (12ch)	STANDARD (21ch)
PIXELS LEDs	DIMMER	1	1
	DIMMER FINE	-	2
	STROBE	2	3
	RED	3	4
	RED FINE	-	5
	GREEN	4	6
	GREEN FINE	-	7
	BLUE	5	8
	BLUE FINE	-	9
	WHITE	6	10
	WHITE FINE	-	11
BEAM LEDs	DIMMER	7	12
	DIMMER FINE	-	13
	STROBE	8	14
COLORS	COLOR MACRO	9	15
	CCT	-	16
	GMT	-	17
XFADE	XFADE PROTOCOL	10	18
	XFADE TO PIXEL ENGINE	11	19
	XFADE WHITE TO COLOR	-	20
	CONTROL	12	21
	HARD LED PIXELS If selected, hard led main dimmer works as master	(if choosed on menu) +49 dimmer channels	(if choosed on menu) +49 dimmer channels

DMX ADVANCED MODES

	PARAMETER	FX 1 (28ch)	FX 2 (32ch)	FX 3 (39ch)	EXTENDED (42ch)
MASTER	DIMMER	1	1	1	1
	DIMMER FINE	2	2	2	2
	STROBE	3	3	3	3
PIXELS LEDs	DIMMER	4	4	4	4
	DIMMER FINE	5	5	5	5
	STROBE	6	6	6	6
	RED	7	7	7	7
	RED FINE	8	8	8	8
	GREEN	9	9	9	9
	GREEN FINE	10	10	10	10
	BLUE	11	11	11	11
	BLUE FINE	12	12	12	12
	WHITE	13	13	13	13
	WHITE FINE	14	14	14	14
BEAM LEDs	DIMMER	15	15	15	15
	DIMMER FINE	16	16	16	16
	STROBE	17	17	17	17
PIXELS LEDs FX	PATTERN SELECTOR	-	18	18	18
	PATTERN SPEED	-	19	19	19
	PATTERN FADE	-	20	20	20
	PATTERN TRANSITION	-	21	21	21
	PATTERN XFADE	-	22	22	22
	DIMMER	-	23	23	23
	STROBE	-	24	24	24
	RED	-	25	25	25
	GREEN	-	26	26	26
	BLUE	-	27	27	27
	WHITE	-	28	28	28
BEAM LEDs FX	PATTERN SELECTOR	18	-	29	29
	PATTERN SPEED	19	-	30	30
	PATTERN FADE	20	-	31	31
	PATTERN TRANSITION	21	-	32	32
	PATTERN XFADE	22	-	33	33
	DIMMER	23	-	34	34
	STROBE	24	-	35	35

COLORS	COLOR MACRO	25	29	36	36
	CCT	-	-	-	37
	GMP	-	-	-	38
XFADE	XFADE PROTOCOL	26	30	37	39
	XFADE TO PIXEL ENGINE	27	31	38	40
	XFADE WHITE TO COLOR	-	-	-	41
	CONTROL	28	32	39	42
	BEAM LAYER If selected, hard led main dimmer works as master	(if choosed on menu) +49 dimmer ch	(if choosed on menu) +49 dimmer ch	(if choosed on menu) +49 dimmer ch	(if choosed on menu) +49 dimmer ch

DMX BASIC SECTORS

	PARAMETER	BASIC SECTORS (256ch)
PIXELS LAYER	DIMMER	1
	DIMMER FINE	2
	STROBE	3
SECTORS	SECTOR 1 RGBW	4
	SECTOR 2 RGBW	8
	[...]	...
	SECTOR 48 RGBW	192
	SECTOR 49 RGBW	196
BEAM LAYER	DIMMER	200
	DIMMER FINE	201
	STROBE	202
SECTORS	LED 1	203
	[...]	...
	LED 49	251
COLORS	CCT	252
	GMP	253
XFADE	XFADE TO PIXEL ENGINE	254
	XFADE WHITE TO COLOR	255
	CONTROL	256

PIXEL DEFINITION

The fixture offers multiple layers of LED control, each with its own configuration, channel mapping, and DMX settings.
The DMX modes selectable in the PIXELS LAYER menu, used as a pixel engine, have independent DMX settings. These can be set to Follow Fixture (to be appended after the main mode and Beam Layer, if active) or configured to operate under a different controller, such as a media server, using a separate protocol (e.g., main and beam on DMX with a console, and pixels on ArtNet with a media server).

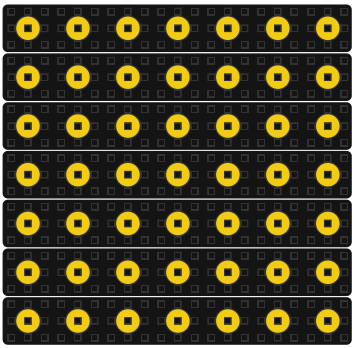

BEAM LAYER

Consists of 49 warm white LEDs arranged in a 7x7 grid. Each LED is controlled by a single dimmer channel.

- **DMX Channels**: 49 (1 per LED).
- **Channel Order**: Sequential from left to right, top to bottom.

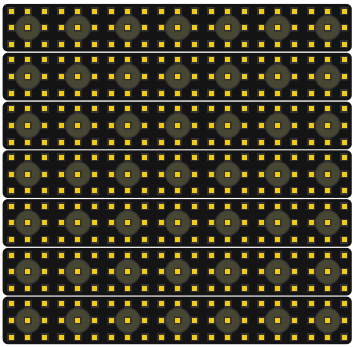

PIXELS LAYER

Contains 441 RGBW LEDs arranged in a 21x21 grid, with each LED controlled by four channels (RGBW).

- **DMX Channels**: 1,764 (4 per LED).
- **Channel Order**: Sequential from left to right, top to bottom.

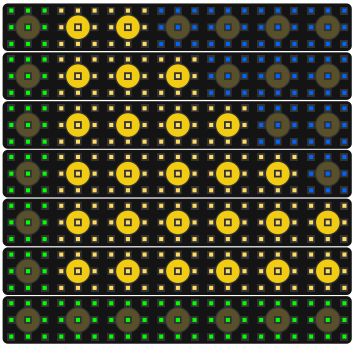

49S MODE

The panel is divided into 49 sectors, each containing 3x3 Pixel LEDs and one Beam LED. Each sector operates in RGBW, with the white channel controlling both the Pixel LEDs in the sector and the Beam LED.

- **DMX Channels**: 196 (4 per sector).
- **Channel Order**: Sequential by sector from left to right, top to bottom.

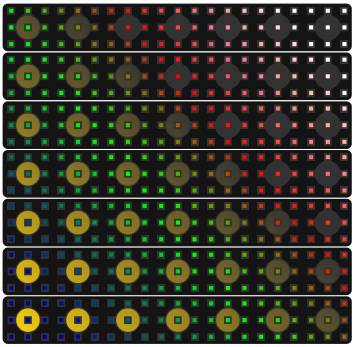

EXTENDED PIXELS MODE

Pixels Mode Only
Available exclusively as a pixel engine.
Provides individual control of all 441 Pixel LEDs in RGBW. Each LED is managed by four channels (RGBW).

- **DMX Channels**: 1,764 (4 per LED).
- **Channel Order**: Sequential from left to right, top to bottom, covering all 441 pixels in the 21x21 grid.

Pixels + Beam Mode
Available only when no main mode is selected (PIXELS ONLY in the menu).
Combines control of the 441 Pixel LEDs with the 49 Beam LEDs.
Pixel LEDs are controlled individually in RGBW, followed by sequential control of each Beam LED in warm white.

- **DMX Channels**: 1,813 (1,764 for Pixels + 49 for Beam).
- **Channel Order**:
  - **Pixels**: Sequential from left to right, top to bottom, covering all 441 LEDs in the 21x21 grid.
  - **Beam LEDs**: Sequential from left to right, top to bottom, covering all 49 LEDs in the 7x7 grid, added after the Pixels in the DMX table.

CHANNEL DEFINITION

Dimmer

Function	8 bit value		16 bit value		Note
	From	To	From	To	
Dimmer	0	255	0	65535	Default @ 0 (Linear Dimmer 0 - 100%)

Strobe

Function	8 bit value		16 bit value		Note
	From	To	From	To	
Open	0	4	-	-	Default @ 255
Strobe (slow to fast)	5	44	-	-	
Open	45	46	-	-	
Pulse In (slow to fast)	47	86	-	-	
Open	87	88	-	-	
Pulse Out (slow to fast)	89	128	-	-	
Close	129	130	-	-	
Random (slow to fast)	131	170	-	-	Random flash on all fixture
Open	171	172	-	-	
Random single pixels (slow to fast)	173	212	-	-	Flash on random pixels
Open	213	214	-	-	
Spikers (slow to fast)	215	254	-	-	Flash on low light
Open	255	255	-	-	

Colors (RED - GREEN - BLUE - WHITE)

Function	8 bit value		16 bit value		Note
	From	To	From	To	
Color	0	255	0	65535	Linear 0 - 100% Default @ 255 (8bit) / 65535 (16bit)

Pattern Selector

Function	8 bit value		16 bit value		Note
	From	To	From	To	
No pattern	0	9	-	-	Default @ 0
Pattern 1	10	14	-	-	
Pattern 2	15	19	-	-	
Pattern 3	20	24	-	-	
Pattern 4	25	29	-	-	
Pattern 5	30	34	-	-	
Pattern 6	35	39	-	-	
Pattern 7	40	44	-	-	
Pattern 8	45	49	-	-	
Pattern 9	50	54	-	-	

Pattern Selector

Function	8 bit value		16 bit value		Note
	From	To	From	To	
Pattern 10	55	59	-	-	
Pattern 11	60	64	-	-	
Pattern 12	65	69	-	-	
Pattern 13	70	74	-	-	
Pattern 14	75	79	-	-	
Pattern 15	80	84	-	-	
Pattern 16	85	89	-	-	
Pattern 17	90	94	-	-	
Pattern 18	95	99	-	-	
Pattern 19	100	104	-	-	
Pattern 20	105	109	-	-	
Pattern 21	110	114	-	-	
Pattern 22	115	119	-	-	
Pattern 23	120	124	-	-	
RESERVED	125	255	-	-	

Pattern Speed

Function	8 bit value		16 bit value		Note
	From	To	From	To	
Indexing	0	127	-	-	Default @ 0
CW from fast to slow	128	190	-	-	
Stop	191	192	-	-	
CCW from slow to fast	193	255	-	-	

Pattern Fade

Function	8 bit value		16 bit value		Note
	From	To	From	To	
0% - 100% (From 0 ms to 5000 ms)	0	255	-	-	Default @ 0 Sets the fade time for LEDs in an effect. For example, with the channel set to 1 second, pixels transitioning from on to off will fade out over 1 second.

Pattern Transition

Function	8 bit value		16 bit value		Note
	From	To	From	To	
No fade	0	0	-	-	Default @ 0 Sets the fade time for transitions between effects. For example, with the channel set to 1 second, transitioning from one effect to another will take 1 second to fade.
0% - 100% (From 0 ms to 5000 ms)	1	255	-	-	

Pattern Xfade

Function	8 bit value		16 bit value		Note
	From	To	From	To	
FX opacity 0%	0	0	-	-	Default @ 0 At 0, only the background color is visible. At 255, the pixel effect fully overlays the background. Values between 0 and 255 gradually blend the pixel effect with the background color.
Fx opacity 0% - 100%	1	255	-	-	

Color Macro

Function	8 bit value		16 bit value		Note
	From	To	From	To	
No function	0	1	-	-	Default @ 0
Red	2	3	-	-	
Green	4	5	-	-	
Blue	6	7	-	-	
Cyan	8	9	-	-	
Magenta	10	11	-	-	
Yellow	12	13	-	-	
Dirty white	14	15	-	-	
Alice bllue	16	17	-	-	
Congo blue	18	19	-	-	
Dark steel blue	20	21	-	-	
Deep lavender	22	23	-	-	
Lilac ting	24	25	-	-	
Daylight blue	26	27	-	-	
Flame red	28	29	-	-	
Bastard amber	30	31	-	-	
Deep orange	32	33	-	-	
Pale gold	34	35	-	-	
Apricot	36	37	-	-	
Bright blue	38	39	-	-	
Primary green	40	41	-	-	
Special lavender	42	43	-	-	
Pale lavender	44	45	-	-	
Deep golden amber	46	47	-	-	
Medium blue	48	49	-	-	
Bright pink	50	51	-	-	
Mauve	52	53	-	-	
Dark green	54	55	-	-	
Lee green	56	57	-	-	
Dark blue	58	59	-	-	
Light blue	60	61	-	-	
Steel blue	62	63	-	-	
Medium blue-green	64	65	-	-	
Peacock blue	66	67	-	-	
Magenta	68	69	-	-	
Dark pink	70	71	-	-	
Middle rose	72	73	-	-	
Light salmon	74	75	-	-	
English rose	76	77	-	-	
Light rose	78	79	-	-	
Orange	80	81	-	-	

Color Macro

Function	8 bit value		16 bit value		Note
	From	To	From	To	
Deep amber	82	83	-	-	
Straw	84	85	-	-	
Light amber	86	87	-	-	
Spring yellow	88	89	-	-	
Dark yellow green	90	91	-	-	
Just blue	92	93	-	-	
Sky blue	94	95	-	-	
Lavender	96	97	-	-	
Light lavender	98	99	-	-	
Pink carnation	100	101	-	-	
Medium pink	102	103	-	-	
Light pink	104	105	-	-	
Sunset red	106	107	-	-	
Dark amber	108	109	-	-	
Gold amber	110	111	-	-	
Medium amber	112	113	-	-	
Fire	114	115	-	-	
Surprise peach	116	117	-	-	
Straw tint	118	119	-	-	
Medium yellow	120	121	-	-	
Lee minus green	122	123	-	-	
Pale gold	124	125	-	-	
Orange	126	127	-	-	
Deep straw	128	129	-	-	
Rose purple	130	131	-	-	
Deep purple	132	133	-	-	
Soft green	134	135	-	-	
Reserved	136	209	-	-	
2700k	210	211	-	-	
2800k	212	213	-	-	
3000k	214	215	-	-	
3200k	216	217	-	-	
3400k	218	219	-	-	
3600k	220	221	-	-	
3800k	222	223	-	-	
4000k	224	225	-	-	
4200k	226	227	-	-	
4400k	228	229	-	-	
4600k	230	231	-	-	
4800k	232	233	-	-	
5000k	234	235	-	-	
5200k	236	237	-	-	
5400k	238	239	-	-	
5600k	240	241	-	-	
6000k	242	243	-	-	
6500k	244	245	-	-	
7000k	246	247	-	-	
8000k	248	249	-	-	
9000k	250	251	-	-	
10000k	252	253	-	-	
Full on	254	255	-	-	

CCT (2800K - 10000K)

Function		8 bit value		16 bit value		Note
CCT(K) From	CCT(K) To	From	To	From	To	
2800	2900	0	4	0	910	Default @ 0
2900	3000	4	7	910	1820	
3000	3100	7	11	1820	2731	
3100	3200	11	14	2731	3641	
3200	3300	14	18	3641	4551	
3300	3400	18	21	4551	5461	
3400	3500	21	25	5461	6371	
3500	3600	25	28	6371	7282	
3600	3700	28	32	7282	8192	
3700	3800	32	35	8192	9102	
3800	3900	35	39	9102	10012	
3900	4000	39	43	10012	10923	
4000	4100	43	46	10923	11833	
4100	4200	46	50	11833	12743	
4200	4300	50	53	12743	13653	
4300	4400	53	57	13653	14563	
4400	4500	57	60	14563	15474	
4500	4600	60	64	15474	16384	
4600	4700	64	67	16384	17294	
4700	4800	67	71	17294	18204	
4800	4900	71	74	18204	19114	
4900	5000	74	78	19114	20025	
5000	5100	78	81	20025	20935	
5100	5200	81	85	20935	21845	
5200	5300	85	89	21845	22755	
5300	5400	89	92	22755	23665	
5400	5500	92	96	23665	24576	
5500	5600	96	99	24576	25486	
5600	5700	99	103	25486	26396	
5700	5800	103	106	26396	27306	
5800	5900	106	110	27306	28216	
5900	6000	110	113	28216	29127	
6000	6100	113	117	29127	30037	
6100	6200	117	120	30037	30947	
6200	6300	120	124	30947	31857	
6300	6400	124	128	31857	32768	
6400	6500	128	131	32768	33678	
6500	6600	131	135	33678	34588	
6600	6700	135	138	34588	35498	
6700	6800	138	142	35498	36408	
6800	6900	142	145	36408	37319	
6900	7000	145	149	37319	38229	
7000	7100	149	152	38229	39139	
7100	7200	152	156	39139	40049	
7200	7300	156	159	40049	40959	

CCT (2800K - 10000K)

Function		8 bit value		16 bit value		Note
CCT(K) From	CCT(K) To	From	To	From	To	
7300	7400	159	163	40959	41870	
7400	7500	163	166	41870	42780	
7500	7600	166	170	42780	43690	
7600	7700	170	174	43690	44600	
7700	7800	174	177	44600	45510	
7800	7900	177	181	45510	46421	
7900	8000	181	184	46421	47331	
8000	8100	184	188	47331	48241	
8100	8200	188	191	48241	49151	
8200	8300	191	195	49151	50061	
8300	8400	195	198	50061	50972	
8400	8500	198	202	50972	51882	
8500	8600	202	205	51882	52792	
8600	8700	205	209	52792	53702	
8700	8800	209	213	53702	54613	
8800	8900	213	216	54613	55523	
8900	9000	216	220	55523	56433	
9000	9100	220	223	56433	57343	
9100	9200	223	227	57343	58253	
9200	9300	227	230	58253	59164	
9300	9400	230	234	59164	60074	
9400	9500	234	237	60074	60984	
9500	9600	237	241	60984	61894	
9600	9700	241	244	61894	62804	
9700	9800	244	248	62804	63715	
9800	9900	248	251	63715	64625	
9900	10000	251	255	64625	65535	

GMP

Function	8 bit value		16 bit value		Note
	From	To	From	To	
Neutral / No Effect	0	1	-	-	Default @ 128
Full Minus Green	2	3	-	-	
-99% to -1%	4	126	-	-	ΔUV from -0.025 to 0.00
Neutral / No Effect	127	128	-	-	
1% to 99%	129	253	-	-	ΔUV from 0.00 to +0.025
Full Plus Green	254	255	-	-	

Crossfade Hierarchy	
Following order must be read from bottom to top. First Level is CCT, Second level is Color Mix, Third level is Pixel Engine (ETH1 in case of double Protocol used), Fourth level is Pixel Engine (ETH2)	
ETH1 to ETH2	Fixture must be running a Pixel Engine using two protocols (Pixel Address -> Artnet+sAcn) Crossfade is inhibited in any other case.
Main to Pixel Engine	Fixture must be running a Pixel Engine. Pixel Engine is allocated on separated DMX Address. Crossfade is inhibited in any other case.
CCT to Color Mix	Crossfade running on Fixture Engine. Crossfades from CCT to Color Mix level. FXs and Tour FXs are running on Color Mix level.

Crossfade from ETH1 to ETH2

Function	8 bit value		16 bit value		Note
	From	To	From	To	
Linear Crossfade	0	255	0	65535	Default @ 0 Crossfade from Pixel Engine running on first ETH protocol to second Pixel Engine running on second ETH protocol

ETH1 = ArtNet
ETH2 = sACN

Crossfade from Main to Pixel Engine

Function	8 bit value		16 bit value		Note
	From	To	From	To	
Linear Crossfade	0	255	0	65535	Default @ 0 Crossfade from Main to Pixel Engine

This channel allows smooth crossfade (0–100%) between Main control and the Pixel Engine.
At 0%, all pixels respond to the Main DMX channels (global RGBW or DIMMER, strobe, effects, etc.).
At 100%, pixel-level control is delegated to an external Pixel Engine, behaving as a separate fixture with its own DMX or protocol input (e.g., media server over DMX, Art-Net, or CRMX).

Depending on the source type, pixels will expose either RGBW or DIMMER control only.

Crossfade from CCT to ColorMix

Function	8 bit value		16 bit value		Note
	From	To	From	To	
Linear Crossfade	0	255	0	65535	Default @ 255 Crossfade from CCT Layer to ColorMix

Control Channel

Function		8 bit value		Note
		From	To	
No Function / Safe		0	1	Default @ 0
DISPLAY	ON	2	3	Hold 3s to take function
	10s	4	5	
	20s	6	7	
	30s	8	9	
FLIP DISPLAY	ON	10	11	
	OFF	12	13	
KEY LOCK	ON	14	15	
	OFF	16	17	
DIMMER CURVE	LINEAR	18	19	
	S-CURVE	20	21	
	SQUARE LAW	22	23	
	INVERSE SQUARE LAW	24	25	
	HIGH RES@LOW	26	27	
DIMMER SPEED PIXELS	AUTO	28	29	
	FAST	30	31	
	MEDIUM	32	33	
	SLOW	34	35	
	OFF	36	37	
DIMMER CURVE BEAM	LINEAR	38	39	
	S-CURVE	40	41	
	SQUARE LAW	42	43	
	INVERSE SQUARE LAW	44	45	
	HIGH RES@LOW	46	47	
	TUNGSTEN	48	49	
DIMMER SPEED BEAM	AUTO	50	51	
	FAST	52	53	
	MEDIUM	54	55	
	SLOW	56	57	
	OFF	58	59	
DIMMER	FADE OFF END	60	61	
	SNAP OFF END	62	63	
WHITE POINT	3200K	64	65	
	4000K	66	67	
	5600K	68	69	
	6000K	70	71	
	8000K	72	73	
	OFF	74	75	
LED FREQUENCY	600HZ	76	77	
	1200HZ	78	79	
	2000HZ	80	81	
	4000HZ	82	83	
	6000HZ	84	85	
	25KHZ	86	87	

Control Channel

Function		8 bit value		Note
		From	To	
DMX FAULT	HOLD	88	89	
	BLACKOUT	90	91	
	STAND ALONE	92	93	
	EMERGENCY	94	95	
INVERT MAPPING	OFF	96	97	
	CW 90°	98	99	
	CW 180 °	100	101	
	CW 270°	102	103	
STANDALONE	MASTER	104	105	
	MASTER NO DMX	106	107	
	SLAVE	108	109	
	PIXELS LAYER TOUR FX	110	111	
	PIXELS LAYER CCT	112	113	
	PIXELS LAYER HSI	114	115	
	PIXELS LAYER FIXED COLORS	116	117	
	PIXELS LAYER WHITE PRESETS	118	119	
	PIXELS LAYER OFF	120	121	
	PIXELS LAYER COLOR MACRO	122	123	
	PIXELS LAYER MANUAL COLORS	124	125	
	BEAM LAYER OFF	126	127	
	BEAM LAYER TOUR FX	128	129	
	BEAM LAYER STATIC	130	131	
POWER MNG	DYNAMIC	132	133	
	CNST 50	134	135	
	CNST 70-30	136	137	
	CNST 30-70	138	139	
Reserved		140	249	
Reset dimmer setting to defaults		250	251	
Reset all channel controlled		252	253	
Reserved		254	255	

12 - RDM FUNCTIONS

RDM Model ID: 0xD159

RDM Personality ID List

ID	DMX Mode	Footprint
1	BASIC	12CH
2	STANDARD	21CH
3	FX 1	28CH
4	FX 2	32CH
5	FX 3	39CH
6	EXTENDED	42CH
7	BASIC SECTORS	256CH

The product can communicate using RDM (Remote Device Management) protocol over a DMX512 Networks.
RDM is a bi-directional communications protocol for use in DMX512 control systems, it is the open standard for DMX512 device configuration and status monitoring.
The RDM protocol allows data packets to be inserted into a DMX512 data stream without affecting existing non-RDM equipment. It allows a console or dedicated RDM controller to send commands to and receive messages from specific fixtures.
The PIDs in the following tables are supported in the product.

Category	Parameter	Value	GET	SET
RDM Information	SUPPORTED_PARAMETERS	0x0050	x	
	PARAMETER_DESCRIPTION	0x0051	x	
Product Information	PRODUCT_DETAIL_ID_LIST	0x0070	x	
	DEVICE_MODEL_DESCRIPTION	0x0080	x	
	MANUFACTURER_LABEL	0x0081	x	
	DEVICE_LABEL	0x0082	x	x
	FACTORY_DEFAULTS	0x0090	x	x
DMX512 Setup	DMX_PERSONALITY	0x00E0	x	x
	DMX_PERSONALITY_DESCRIPTION	0x00E1	x	
	DMX_START_ADDRESS	0x00F0	x	x
	SLOT_INFO	0x0120	x	
	SLOT_DESCRIPTION	0x0121	x	
	DEFAULT_SLOT_VALUE	0x0122	x	
Sensors	SENSOR_DEFINITION	0x0200	x	
	SENSOR_VALUE	0x0201	x	x
Dimmer Settings	DIMMER_INFO	0x0340	x	
	CURVE	0x0343	x	x
	CURVE_DESCRIPTION	0x0344	x	x
	OUTPUT_RESPONSE_TIME	0x0345	x	x
	OUTPUT_RESPONSE_TIME_ DESCRIPTION	0x0346	x	
	MODULATION_FREQUENCY	0x0347	x	x
	MODULATION_FREQUENCY_ DESCRIPTION	0x0348	x	

Category	Parameter	Value	GET	SET
Power/Lamp Settings	DEVICE_HOURS	0x0400	x	x
	LAMP_HOURS	0x0401	x	
	LAMP_STRIKES	0x0402	x	
	LAMP_STATE	0x0403	x	x
	LAMP_MODE	0x0404	x	x
	DEVICE_POWER_CYCLES	0x0405	x	x
Display Settings	DISPLAY_INVERT	0x0500	x	x
Configuration	LOCK_STATE	0x0641	x	x
	LOCK_STATE_DESCRIPTION	0x0642	x	
Control	IDENTIFY_MODE	0x1040	x	x

Manufacturer Specific PIDs

Parameter	PID	GET	SET	Value	Description
MASTER/SLAVE	0x8211	x	x	0-2	0:Master DMX 1:Master NO DMX **2: Slave**
DMX FAULT	0x82DD	x	x	0-3	0: Hold 1: Blackout **2:Stand Alone** 3:Emergency
POWER MANAGEMENT	0x8300	x	x	0-3	**0: DYNAMIC** 1: Constant 50% Pixel - 50% Beam 2: Constant 70% Pixel - 30% Beam 3: Constant 30% Pixel - 70% Beam
BEAM LAYER TOUR FX	0x8376	x	x	1-23	**1: Fx1** ... 23: Fx23
BEAM LED STATIC	0x8377	x	x	0-255	**DEFAULT: 255**
BEAM LED DIMMER CURVE	0x8378	x	x	0-5	0: Linear 1: S-curve **2: Square law** 3: Inverse square law 4: High res@low 5: Tungsten
BEAM LED DIMMER SPEED	0x8379	x	x	0-4	**0: Auto** 1: Fast 2: Medium 3: Slow 4: Off
BEAM LAYER	0x8381	x	x	0-1	**0: Single** 1: 49Pix
PIXEL PROTOCOL	0x82E5	x	x	0-4	0:Off 1:Dmx 2:Artnet 3:sAcn 4:sAcn+Artnet

Manufacturer Specific PIDs

Parameter	PID	GET	SET	Value	Description
PIXELS LAYER	0x82E7	x	x	0-2	**0: Off** 1: 49s 2: Pixels
PIXELS LAYER CCT	0x8346	x	x	0-255	**DEFAULT: 255**
PIXELS LAYER FIXED COLOR	0x82BE	x	x	0-14	0: R 1: G 2: B 3: W 4: RG 5: RB 6: RW 7: GB 8: GW 9: BW 10:RGB 11:RGW 12:RBW 13:GBW **14:RGBW**
PIXELS LAYER WHITE PRESETS	0x82BF	x	x	0-12	0: 2800K 1: 3200K 2: 3500K 3: 4000K 4: 4500K 5: 5000K **6: 5600K** 7: 6000K 8: 6500K 9: 7000K 10:8000K 11:9000K 12:10000K
PIXELS LAYER COLOR MACRO	0x82ED	x	x	0-66	Refer to DMX charts
PIXELS LAYER MANUAL RED	0x82C0	x	x	0-255	**DEFAULT: 255**
PIXELS LAYER MANUAL GREEN	0x82C1	x	x	0-255	**DEFAULT: 255**
PIXELS LAYER MANUAL BLUE	0x82C2	x	x	0-255	**DEFAULT: 255**
PIXELS LAYER MANUAL WHITE	0x82C3	x	x	0-255	**DEFAULT: 255**
PIXELS LAYER TOUR FX	0x8375	x	x	1-23	**1: Fx1** ... 23: Fx23
PIXELS DMX ADDRESS	0x82E6	x	x	1-512	**DEFAULT: 1**
STAND ALONE BEAM LAYER	0x8374	x	x	0-2	0: Off 1: Tour Fx **2: Static**
STAND ALONE PIXELS LAYER	0x8373	x	x	0-7	0: Off 1: Tour Fx 2: Cct 3: Hsi **4: Fixed Colors** 5: White Presets 6: Color Macro 7: Manual Colors
FACTORY DEFAULT	0x8328	x	x	0-1	**0: No function** 1: Standard 2: User
CURRENT HOURS	0x82C5	x		0-1	
INVERT MAPPING	0x82E1	x		0-2	**0: Off** 1: CW 90° 2: CW 180° 3: CW 270°
ERROR MESSAGES	0x82EA	x		0-2	
MAINTENANCE TIME:ALERT PERIOD	0x82DF	x	x	10-300	**DEFAULT: 300**

Manufacturer Specific PIDs

Parameter	PID	GET	SET	Value	Description
MAINTENANCE TIME:ELAPSED TIME	0x82E0	x	x	0-1	**DEFAULT: 0**
USER SETTINGS	0x8329	x	x	0-5	**0: No preset** 1: Preset 1 ... 5: Preset 5
PIXEL ONLY	0x82E3	x	x	0-3	**0: Off** 1: 49S 2: Pixels 3: Pixels+Beam
WIRELESS	0x8310	x	x	0-1	**0: Off** 1: On

13 - ERROR MESSAGES

The error is shown on the unit display. In the table below, the "ERROR SHOWED ON SCREEN" column lists the possible errors, accompanied by a possible cause ("POSSIBLE" CAUSES "column).

ERROR SHOWED ON SCREEN	POSSIBLE CAUSES	POSSIBLE PCB WITH ANOMALY
[LED1 ERROR]	Communication error of the LED strip 1	LED STRIP 1
[LED2 ERROR]	Communication error of the LED strip 2	LED STRIP 2
[LED3 ERROR]	Communication error of the LED strip 3	LED STRIP 3
[LED4 ERROR]	Communication error of the LED strip 4	LED STRIP 4
[LED5 ERROR]	Communication error of the LED strip 5	LED STRIP 5
[LED6 ERROR]	Communication error of the LED strip 6	LED STRIP 6
[LED7 ERROR]	Communication error of the LED strip 7	LED STRIP 7
[HALO TEMP. ERROR]	HALO Temperature sensor fault / Temperature too high	HALO PCBs
[PIXELS TEMP. ERROR]	PIXELS Temperature sensor fault / Temperature too high	PIXEL PCBs
[NEED MAINTENANCE]	Maintenance needed	-

14 - ACCESSORIES INSTALLATION

HANGING BAR STACKING SYSTEM

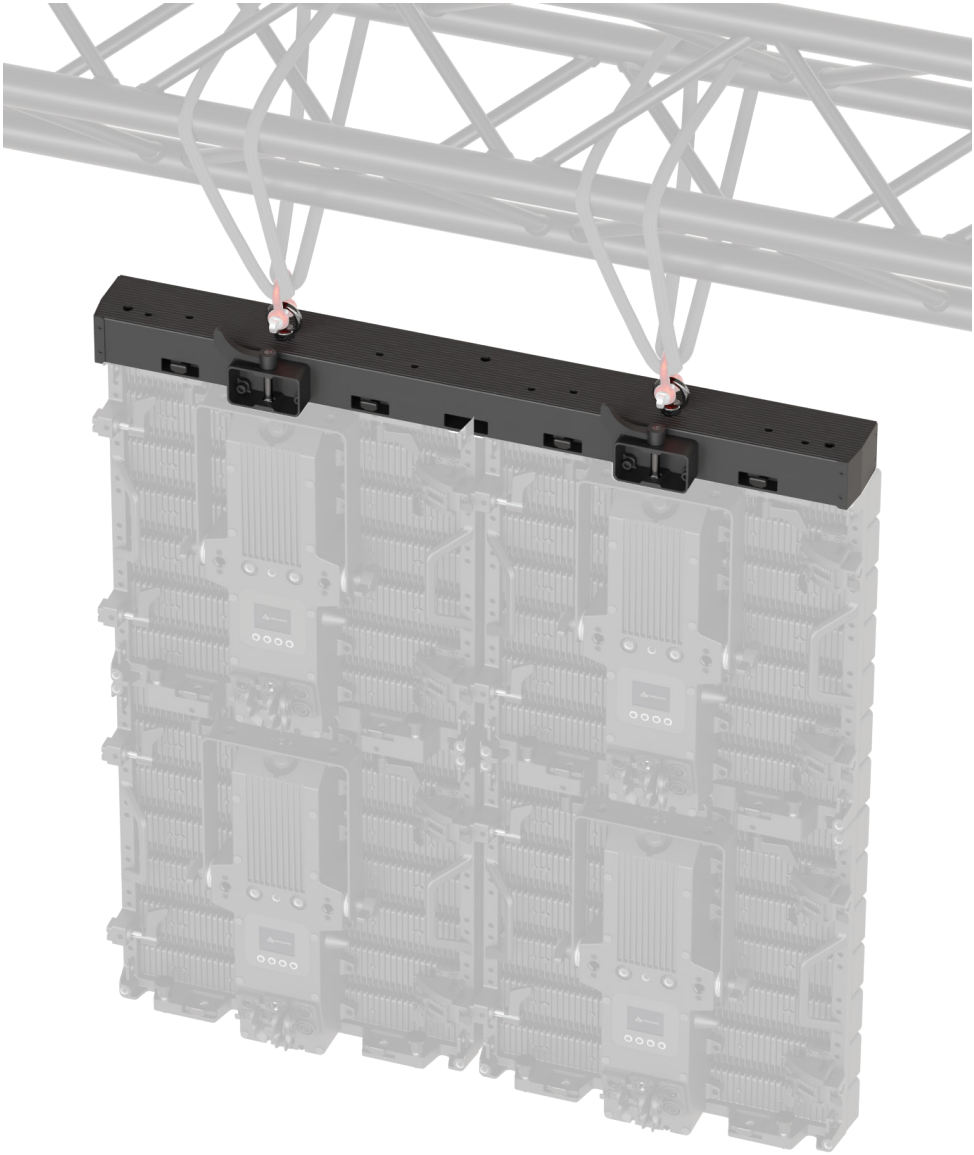

NOTE: With fly-bar configuration is possible to hang up to **6 units** for each column.

Step 1

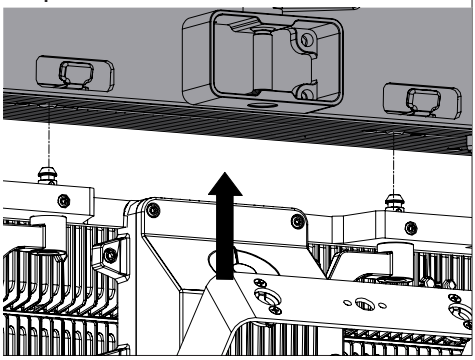

Step 2

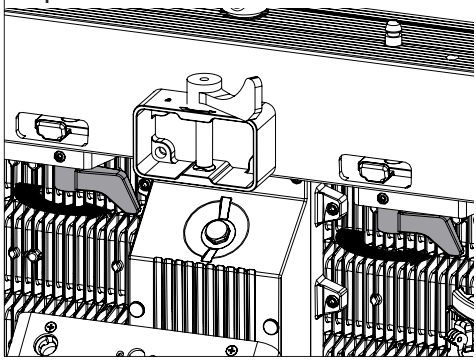

Once the **VBHGB01** / **VBHGB02** is fixed properly is possible to hang the HALUPIXDUO (1) locking the onboard mechanics rotating them as shown in the figure (2).

Step 3

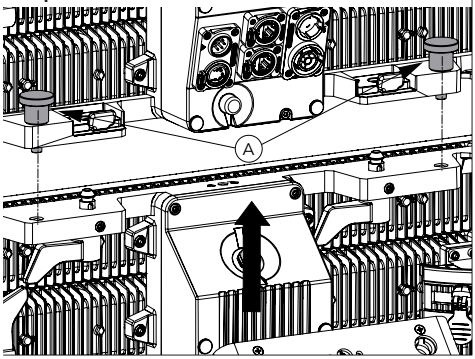

Step 4

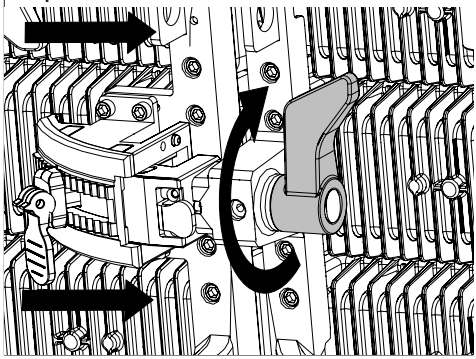

Once the first HALUPIXDUO is fixed, is possible to hang up other units on the bottom (3) and near (4).

NOTE: *HALUPIXDUO is equipped with centering pins (A) on the bottom side to easy hang each unit.*

Step 5

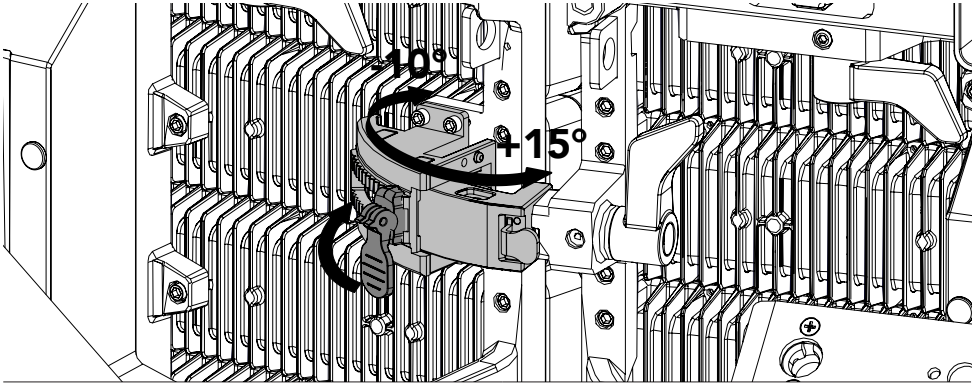

HALUPIXDUO is equipped with adjustable mechanics from -10° to +15° to perfectly rotate each unit.

WALL APPLICATION SYSTEM

HALUPIXDUO can be assembled also from the back (without any support from hanging or grounding).

Step 1

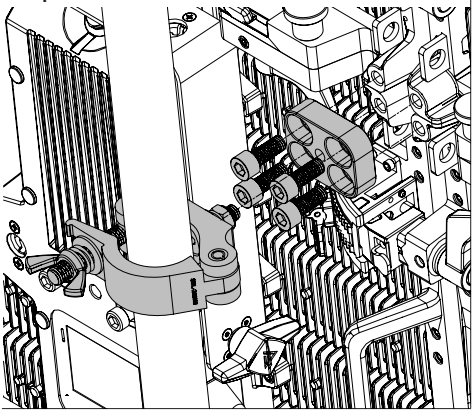

Step 2

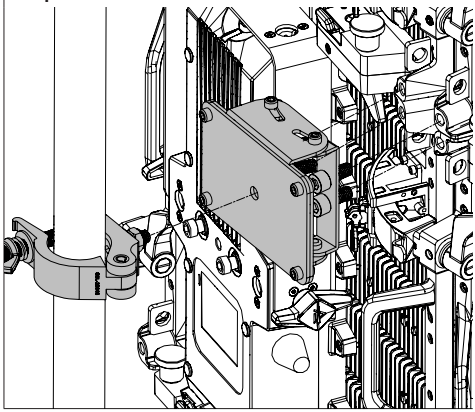

Use **VBJMPF** (1) for flat configurations, and **VBJMPC** (2) for curved configurations.

GROUND BAR STACKING SYSTEM

NOTE: *For ground installations it is mandatory to use the* ***KSXSPC****.*

Step 1

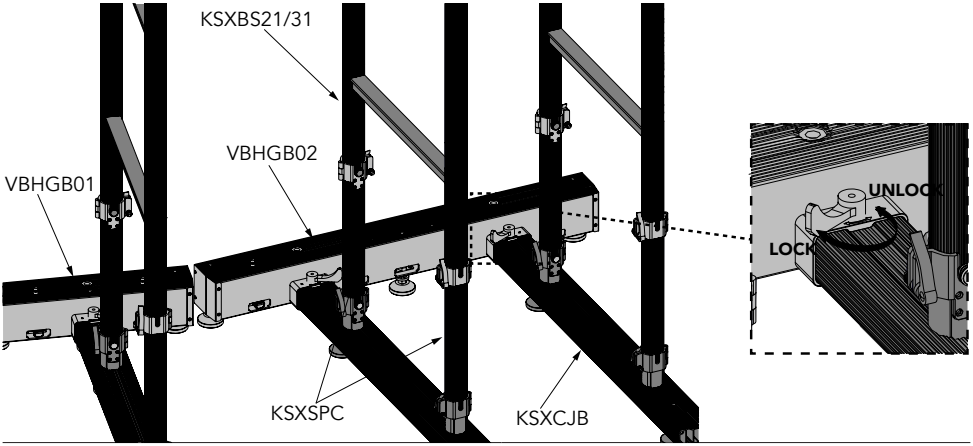

For an easy installation first of all is necessary to set up the ground-stack accessories (1):

Step 2

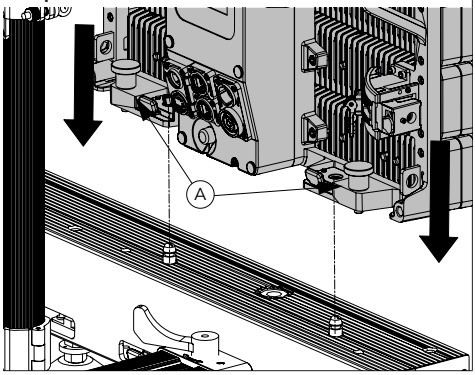

Step 3

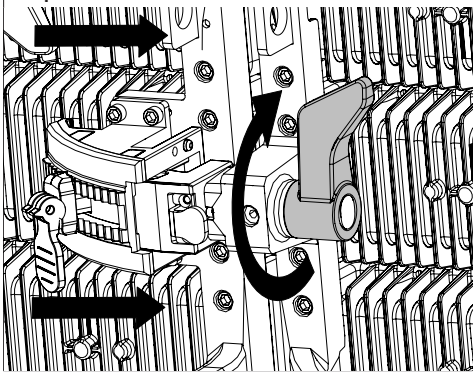

Now is possible to install the HALUPIXDUO as shown on the figure (2).

NOTE: *HALUPIXDUO is equipped with adjustable mechanics (3) on the left side to perfectly rotate each unit.*

Step 4

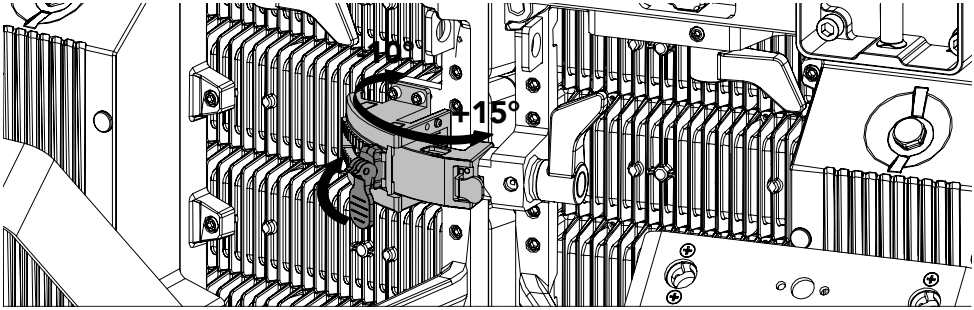

HALUPIXDUO is equipped with adjustable mechanics from -10° to +15° to perfectly rotate each unit.

Step 5

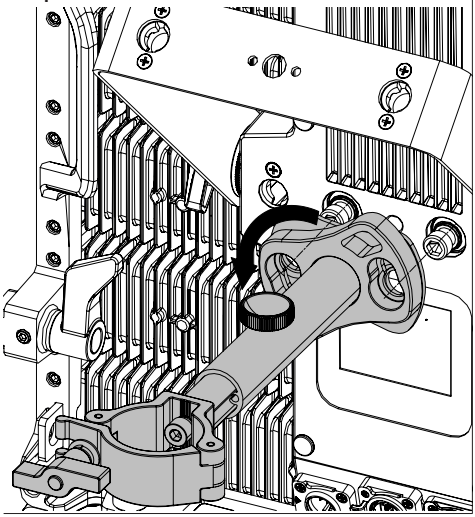

Step 6

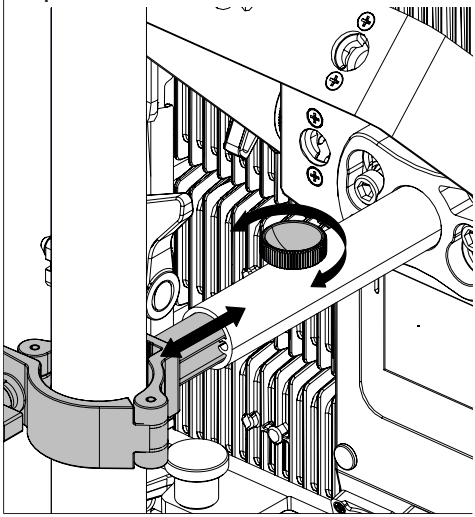

When hanging up multiple unit is possible to use **KSXBSC** (5-6) to push HALUPIXDUO from the back.

Step 7

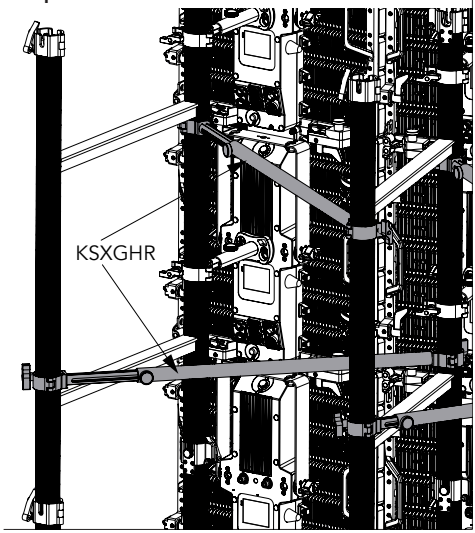

Step 8

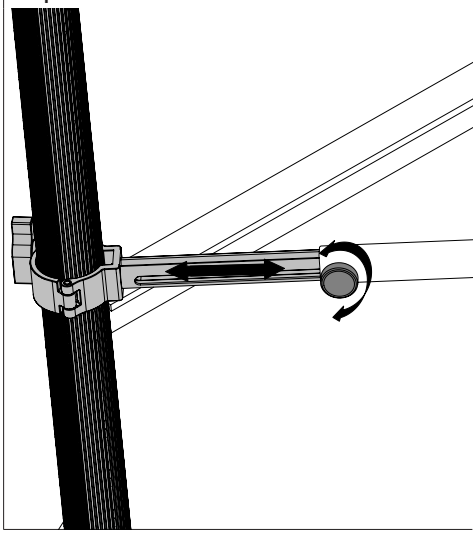

To avoid any movement of the whole structure use **KSXGHR** (7-8) to perfectly fix all the back structure.

15 - MAINTENANCE

MAINTENANCE AND CLEANING THE PRODUCT

WARNING: Disconnect from the mains before starting any maintenance work

It is recommended to clean the front at regular intervals, from impurities caused by dust, smoke, or other particles to ensure that the light is radiated at maximum brightness.

- For cleaning, disconnect the main plug from the socket. Use a soft, clean cloth moistened with a mild detergent. Then carefully wipe the part dry. For cleaning other housing parts use only a soft, clean cloth. Never use a liquid, it might penetrate the unit and cause damage to it.
- The user must clean the product periodically to maintain optimum performance and cooling. The user may also upload firmware (product software) to the fixture via the DMX signal input port or USB port using firmware and instructions from PROLIGHTS.
- The frequency of such maintenance operations is to be performed according to various factors, such as the amount of the use and the condition of the installation environment (air humidity, presence of dust, salinity, etc.). It is recommended that the product is subject to annual service by a qualified technician for special maintenance involving at least the following procedures:
- General cleaning of internal parts.
- For all the parts subject to friction, using lubricants specifically supplied by PROLIGHTS.
- General visual check of the internal components, cabling, mechanical parts, etc.
- Electrical, photometric and functional checks; eventual repairs.
- Cleaning the lenses. Only use neutral soap and water to clean the lenses, then dry it carefully with a soft, non-abrasive cloth.

WARNING: the use of alcohol or any other detergent could damage the lenses.

- **Only for IP65/IP66 projectors**: It is recommended to verify IP grade using IPTESTBOX every time the bodies are removed for maintenance, this tool helps to double check the correct assembling of the covers with a check of the IP grade of the fixture.
- All other service operations on the product must be carried out by PROLIGHTS, its approved service agents or trained and qualified personnel.
- It is PROLIGHTS policy to apply the strictest possible calibration procedures and use the best quality materials available to ensure optimum performance and the longest possible component lifetimes. However, optical components are subject to wear and tear over the life of the product, resulting in gradual changes in colours over many thousands of hours of use. The extent of wear and tear depends heavily on operating conditions and environment, so it is impossible to specify precisely whether and to what extent performance will be affected. However, you may eventually need to replace optical components if their characteristics are affected by wear and tear after an extended period of use and if you require fixtures to perform within very precise optical and colour parameters.
- Do not apply filters, lenses or other materials on lenses or other optical components. Use only accessories approved by PROLIGHTS.

REPLACING THE FUSE

WARNING: Before replacing the fuse, unplug the product from the mains.

- Remove the old fuse from the housing with a suitable screwdriver (anticlockwise) and replace it with one of the same type and of the same classification (T15A 250V).

VISUAL CHECK OF PRODUCT HOUSING

- The parts of the product cover/housing should be checked for eventual damages and breaking start at least every two months. In addition, especially the parts of the front lens holder have to be checked mechanically (by means of movement by the part) if it is firmly fastened to the fixture. If hint of a crack is found on some plastic part, do not use the product until the damaged part will be replaced.
- Cracks or another damages of the cover/housing parts can be caused by the product transportation or manipulation and also ageing process may influence materials.
- This checking is necessary for both fixed installations and preparing product for renting. Any free moving parts inside of the product, cracked cover/housing or any part of front lens not sitting properly in place need to be immediately replaced.

TROUBLESHOOTING

Problems	Possible causes	Checks and remedies
Product doesn't power ON	• No power to the product.	• Check that power is switched ON and cables are plugged in.
	• Fuse blown or internal fault.	• Contact the PROLIGHTS Service or authorized service partner. Do not remove parts and/or covers, or carry out any repairs or service that are not described in this Safety and User Manual unless you have both authorization from PROLIGHTS and the service documentation.
Product does not respond correctly to the contoller.	• Bad signal connection.	• Inspect connections and cables. Fix eventual bad connections. Repair or replace damaged cables.
	• Signal connection not terminated.	• Insert DMX termination plug in signal output socket of the last product on the signal line.
	• Incorrect addressing of the product.	• Check the product address and control settings.
	• One of the product is defective and is corrupting the signal transmission on the signal line.	• Unplug the XLR in and out connectors and connect them directly together to bypass one product at a time until normal operation is regained. Once found the error, have that fixture serviced by a qualified technician.
Timeout error	• One or more hardware components requires mechanical adjustments.	• Check product stored error messages for more information. Contact PROLIGHTS Service or an authorized service partner.
Light output turn OFF Intermittently	• Fixture is too hot.	• Check product stored error messages. • Allow product to cool. • Clean the product. • Reduce ambient temperature.
	• Hardware failure (temperature sensor, Light source...).	• Check product stored error messages for more information. Contact PROLIGHTS Service or an authorized service partner.
General low light intensity	• Dirty lens assembly • Dirty or damaged filters	• Clean the fixture regularly. • Install lens assembly properly.

Contact an authorized service center in case of technical problems or not reported in the table can not be resolved by the procedure given in the table.

16 - IP65 RATING TEST

It is recommended to verify IP grade using IPTESTBOX every time the bodies are removed for maintenance.

1

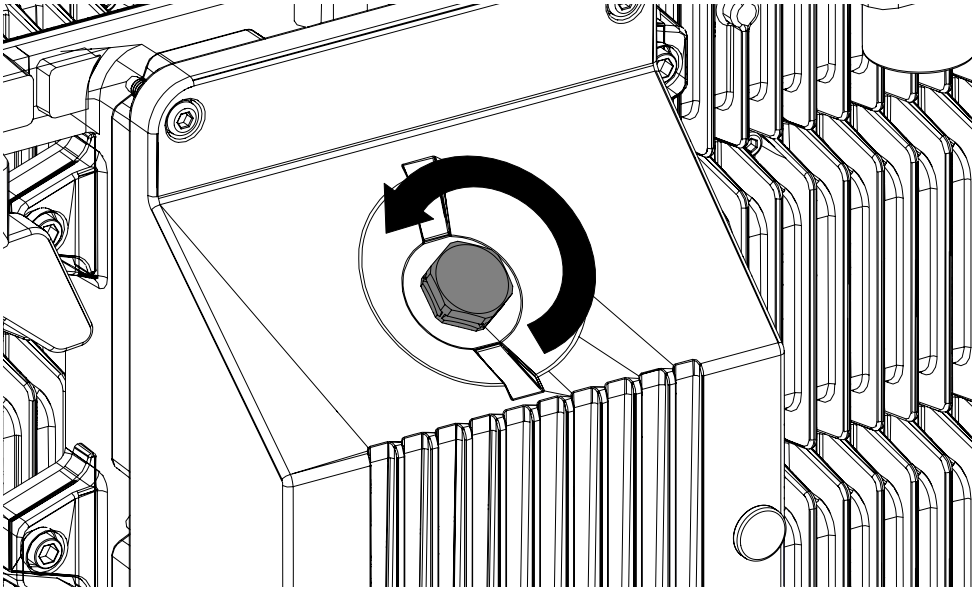

Remove the first gore valve from the side of the projector.

2

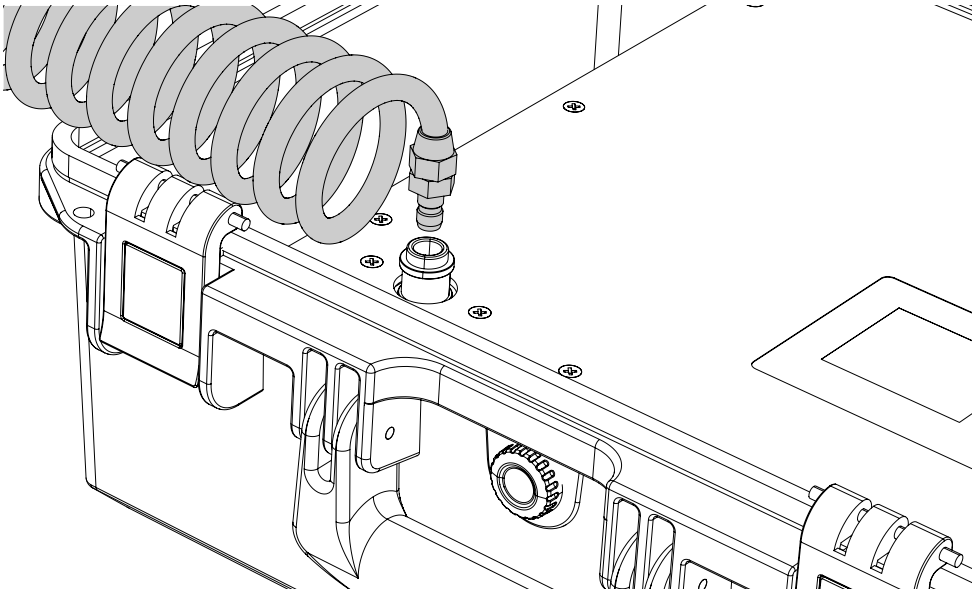

Connect the air hose to the IPTESTBOX by inserting the quick-connect fitting into the coupler.

3

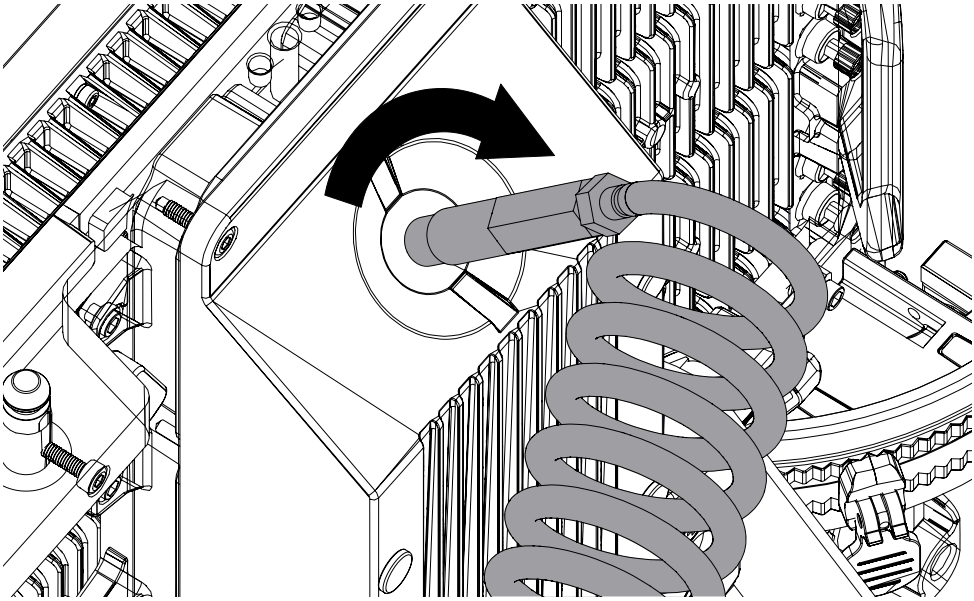

Insert the threaded end into the threaded valve hole socket.
For the operating procedure using the instrument, refer to the IPTESTBOX user manual.

Fig. 19

Note

Note

Note

PROLIGHTS is a trademark of
MUSIC & LIGHTS S.r.l.
musiclights.it

Via A.Olivetti snc
04026 - Minturno (LT) ITALY
Tel: +39 0771 72190

prolights.it
support@prolights.it